OTAX

DIP Switch
Operational Switch
Data Sheet

As of July 2026

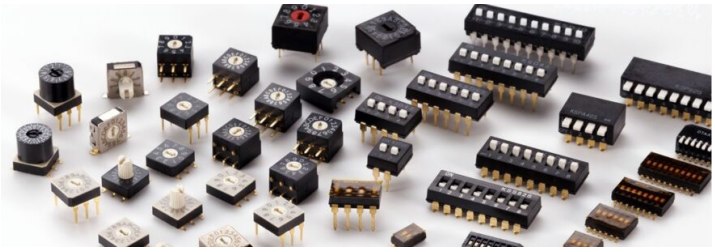

DIP Switch

DIP Slide	KSD/KSS Series	1 ～ 4
	KHS Series	5 ～ 10
	KY Series	11 ～ 14
	KJ Series	15 ～ 16
DIP Piano	KSP Series	17 ～ 22
	KHP Series	23 ～ 26
DIP Rotary	KD/KM/KW Series	27 ～ 32
	KS/KE Series	33 ～ 36
	KZ Series	37 ～ 42
SIP Switch	SX Series	43 ～ 46
DIP Switch Soldering Conditions		47

Operational Switch

A Series Toggle・Splash-proof Toggle		49 ～ 56
	Rocker	57 ～ 62
	Pushbutton	63 ～ 68
	Rotary	69 ～ 72
AV Series	Toggle	73 ～ 78
	Rocker	79 ～ 82
AW Series	Splash-proof Toggle	83 ～ 88
AY Series	Splash-proof Toggle	89 ～ 90
B Series	Toggle	91 ～ 96
	Rocker	97 ～ 100
	Pushbutton	101 ～ 106
	Slide	107 ～ 110
C Series	Toggle	111 ～ 114
	Rocker	115 ～ 118
	Slide	119 ～ 122
D Series	Rotary	123 ～ 124
E Series	Rotary	125 ～ 126
FX Series	Toggle・Splash-proof Toggle	127 ～ 136
	Rocker	137 ～ 144
	Pushbutton	145 ～ 152
J Series	Rotary	153 ～ 156
L Series	Rocker	157 ～ 162
N Series	Toggle	163 ～ 166
	Pushbutton	167 ～ 170
T Series	Rocker	171 ～ 176
V Series	Rocker	177 ～ 182
VSA Series	Slide	183 ～ 184
VZ Series	Rocker	185 ～ 190

DIP Switch | KSD/KSS Series | DIP Slide | Through Hole・SMD | 1～12P (excl. 11P)

SlideType/SMD

Flat Knob SlideType
Through Hole Mounting

Outline of the Series

This is the flagship DIP switch series from OTAX Corporation, a global leader in DIP switch production.

Features of the Series

1. The knife-edge, high-pressure contact mechanism ensures stable connection even at micro-currents.
2. The high contact pressure prevents malfunctions caused by vibration and shock.
3. The terminal shape and external dimensions are equivalent to those of DIP-type semiconductor packages, allowing for easy automatic mounting.
4. In addition to the standard slide-type actuator, a flat-type knob with no protruding parts is also available.

■ Knife-edge High-pressure Contact

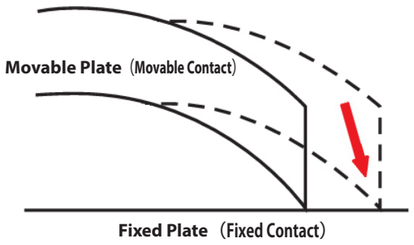

The knife-shaped tip of the movable contact penetrates into the fixed contact, providing a contact structure that is highly resistant to surface contamination and foreign particles.

■ Structure

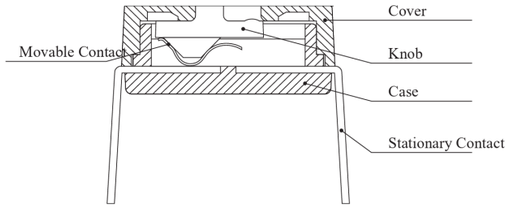

Through Hole Mounting Type

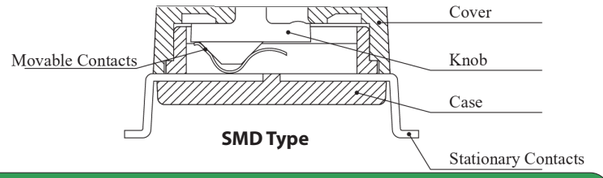

SMD Type

Common Specifications

Ratings	DC5V　10mA
Contact Resistance	50 mΩ Max. (Initial value))
Withstanding Voltage	AC300V　1 Minute
Insulating Resistance	100MΩMin.
Electrical Life	1,000 times
Operating Temperature Range	-40℃～ +85℃
Storage Temperature Range	-40℃～ +85℃
Operating Force	7.9N Max.
Number of Re-flow	2 回 Max.

Specifications of Materials

Part Name	Materials	Finish
Knob	Heat-resistant Polyamide	White
Cover	PPS	Black
Case	PPS	Black
Movable Plate（Movable Contact）	Copper Alloy	Gold Plating
Fixed Plate（Fixed Contact）	Copper Alloy	Gold Plating

* For products other than those listed above or for custom items, please contact us.

OTAX Co., Ltd.
1215, Nippacho, Kohoku-ward,
Yokohama, Kanagawa, 223-8558 Japan
otax
TEL: +81-45-543-5621（Representative）
Mail: sales@otax.co.jp
HP: https://www.otax-en.com/

DIP Switch | KSD/KSS Series | DIP Slide | Through Hole・SMD | 1～12P (excl. 11P)

Product Designations

Series Name	Shape of Operational-part	Poles		Type of Terminals	Package
K	S	D	8	2	S	E

Shape of Operational-part	Symbol
Slide	D
Flat Knob Slide	S
Slide (ON-OFF reversed)	DA
Flat Knob Slide (ON-OFF reversed)	SA

Poles	Symbol
1	12
2	22
3	32
4	42
5	52
6	62
7	72
8	82
9	92
10	102
12	122

Type of Terminals	Symbol
Through Hole Mounting	(none)
SMD	S

Package	Symbol
Magazine	(none)
Tape-reel（SMD only）(Number of pieces per reel -> cf. P.4)	E
Tape-reel（SMD only）(100 pcs / reel)	E100

Standard Dimensions（Through Hole MountingType）

Slide Type　KSD □□□

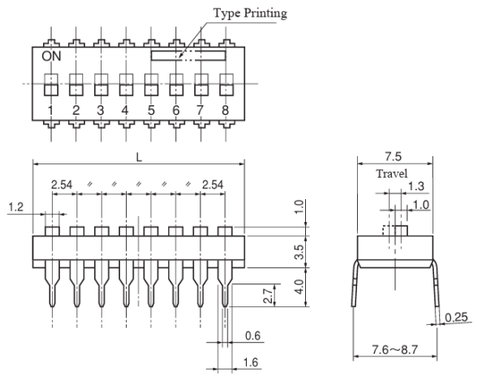

Flat Knob Slide Type　KSS □□□

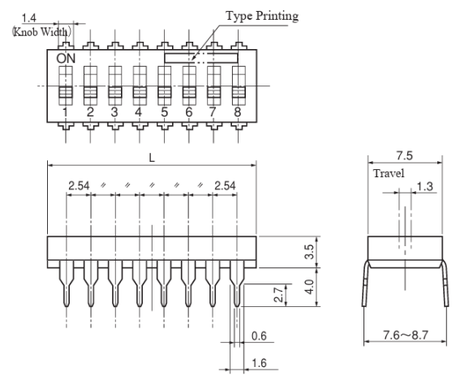

Mounting Hole Dimensions

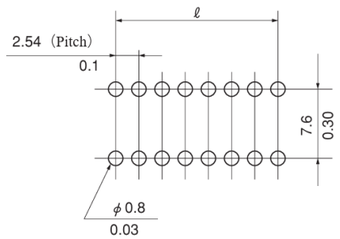

Product Names and Dimensions

Product Name	Poles	L (mm)	ℓ (mm)
KSD12	1	4.5	—
KSS12			
KSD22	2	7.0	2.54
KSS22			
KSD32	3	9.6	5.08
KSS32			
KSD42	4	12.1	7.62
KSS42			
KSD52	5	14.6	10.16
KSS52			
KSD62	6	17.2	12.70
KSS62			

Product Name	Poles	L (mm)	ℓ (mm)
KSD72	7	19.7	15.24
KSS72			
KSD82	8	22.3	17.78
KSS82			
KSD92	9	24.8	20.32
KSS92			
KSD102	10	27.3	22.86
KSS102			
KSD122	12	32.5	27.94
KSS122			

* For products other than those listed above or for custom items, please contact us.

OTAX Co., Ltd.
1215, Nippacho, Kohoku-ward,
Yokohama, Kanagawa, 223-8558 Japan
otax
TEL: +81-45-543-5621（Representative）
Mail: sales@otax.co.jp
HP: https://www.otax-en.com/

Standard Dimensions（SMD \fType）

Slide Type　KSD □□ S □

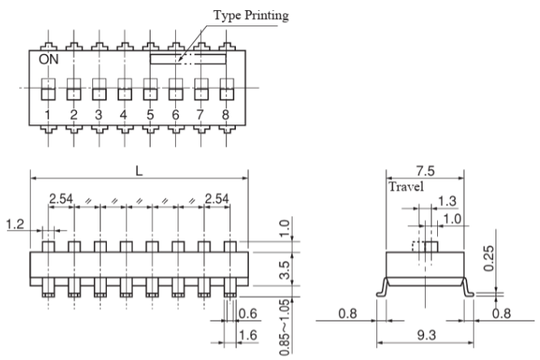

Flat Knob Slide Type　KSS □□ S □

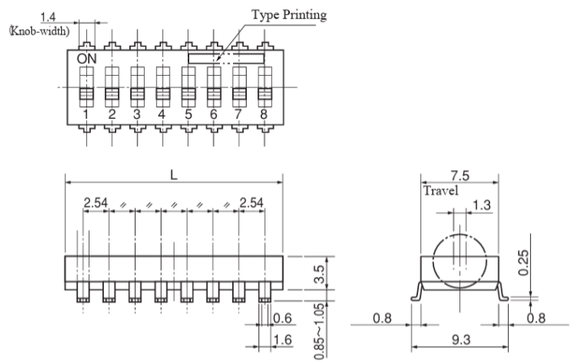

Mounting Land Dimensions

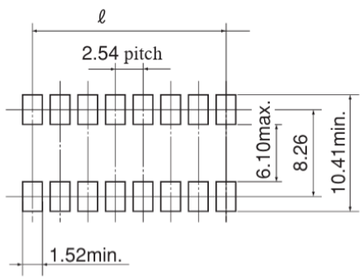

Product Names and Dimensions

Product Name	Poles	L (mm)	ℓ (mm)
KSD12S□ KSS12S□	1	4.5	—
KSD22S□ KSS22S□	2	7.0	2.54
KSD32S□ KSS32S□	3	9.6	5.08
KSD42S□ KSS42S□	4	12.1	7.62
KSD52S□ KSS52S□	5	14.6	10.16
KSD62S□ KSS62S□	6	17.2	12.70

Product Name	Poles	L (mm)	ℓ (mm)
KSD72S□ KSS72S□	7	19.7	15.24
KSD82S□ KSS82S□	8	22.3	17.78
KSD92S□ KSS92S□	9	24.8	20.32
KSD102S□ KSS102S□	10	27.3	22.86
KSD122S□ KSS122S□	12	32.5	27.94

Soldering Conditions

＊ Regarding the Soldering Conditions, please refer to the separate data sheet.（Hand Soldering Condition is A.)

Cautions on Handling Products

1. Cleaning agents such as alcohol-based, petroleum-based, ketone-based, and chlorine-based solvents can be used.
2. The conditions for reflow soldering may vary depending on the dimensions of the printed circuit board and the assembly density in the actual production process. Please refer to the temperature profile in the separate datasheet in advance, and confirm the surface temperature and soldering condition of the mounted product before use.

* For products other than those listed above or for custom items, please contact us.

OTAX Co., Ltd.
1215, Nippacho, Kohoku-ward,
Yokohama, Kanagawa, 223-8558 Japan
TEL: +81-45-543-5621（Representative）
Mail: sales@otax.co.jp
HP: https://www.otax-en.com/

DIP Switch | KSD/KSS Series | DIP Slide | Through Hole・SMD | 1 ～ 12P (excl. 11P)

Packagning Q'ty for Box, Magazine and Reel

Poles	Q'ty per 1 Magagine（pcs）	Through Hole Mounting Type		SMD Type	
		Q'ty of Magagine per 1 Box (pcs)	Total Q'ty per 1 Box (pcs)	Q'ty of Magagines per 1 Box (pcs)	Total Q'ty per 1 Box (pcs)
1	100	40	4,000	60	6,000
2	60	40	2,400	60	3,600
3	45	40	1,800	60	2,700
4	35	40	1,400	58	2,000 (The last magagine contains only 5 pieces.)
5	30	40	1,200	60	1,800
6	25	40	1,000	60	1,500
7	20	40	800	60	1,200
8	20	40	800	60	1,200
9	15	40	600	60	900
10	15	40	600	60	900
12	14	40	550 (The last magagine contains only 4 pieces.)	58	800 (The last magagine contains only 2 pieces.)

Poles	KSD □□ SE	KSS □□ SE
	Total Q'ty per 1 Reel（pcs）	Total Q'ty per 1 Reel（pcs）
1	1,450	1,500
2	700	750
3	700	750
4	700	750
5	700	750
6	700	750
7	700	750
8	700	750
9	700	750
10	700	750
12	700	750

* For products other than those listed above or for custom items, please contact us.

OTAX Co., Ltd.
1215, Nippacho, Kohoku-ward,
Yokohama, Kanagawa, 223-8558 Japan
TEL: +81-45-543-5621（Representative）
Mail: sales@otax.co.jp
HP: https://www.otax-en.com/

DIP Switch KHS Series

DIP Slide | SMD | 1,2,4,6,8,10 Poles

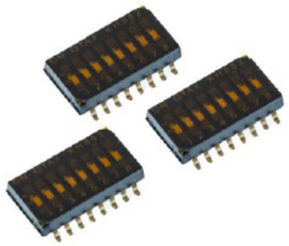

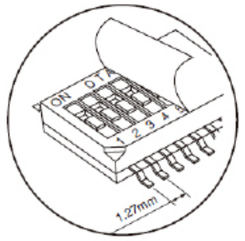

■ Structure

Outline of the Series

This is a half-pitch surface-mount DIP slide switch developed by OTAX ahead of the rest of the world.
It is available with either gull-wing or J-lead terminals.

Features of the Series

1. Achieves ultra-miniaturization with a half-pitch (P = 1.27 mm) by significantly reducing the size of the internal mechanism.
2. Enables high-density mounting (41.9% of our conventional product footprint for 8 poles).
3. Gold-plated contacts are provided as standard.
4. Two terminal shapes are available: gull-wing type and J-lead type.
5. Supports automated mounting by SMT mounters, reflow soldering, and cleaning (via tape seal). Tape reel and magazine packaging are also available for automated mounting.

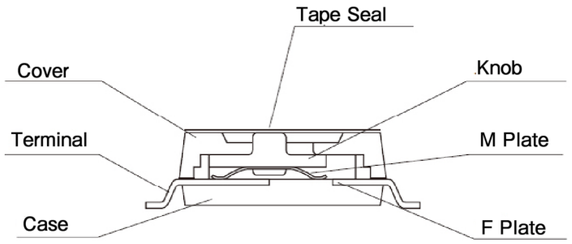

Gull-wing

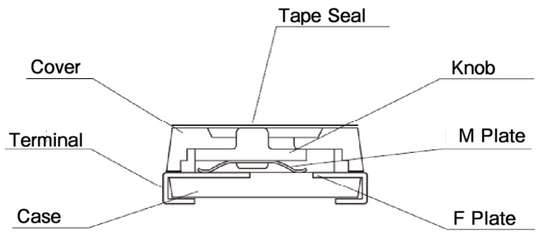

J-lead

Common Specifications

Ratings	DC24V 25mA
Contact Resistance	100 mΩ Max. (initial value))
Withstanding Voltage	AC300V 1 Minute
Insulating Resistance	Min. 100MΩ
Electrical Life	1,000 times
Operating Temperature Range	-30℃～+85℃
Storage Temperature Range	-40℃～+85℃
Operating Force	4.9N Max.
Number of Re-flow	2 times Max.

Specifications of Materials

Part Name	Materials	Finish
Knob	LCP	White
Cover	PPS	Black
Case	PPS	Black
Terminals (except contact-parts)	Copper Alloy	Gold Flash
Movable Plate (Movable Contact)	Copper Alloy	Gold Plating
Fixed Plate (Fixed Contact)	Copper Alloy	Gold Plating

* For products other than those listed above or for custom items, please contact us.

OTAX Co., Ltd.
1215, Nippacho, Kohoku-ward,
Yokohama, Kanagawa, 223-8558 Japan
TEL: +81-45-543-5621 (Representative)
Mail: sales@otax.co.jp
HP: https://www.otax-en.com/

DIP Switch KHS Series

DIP Slide | SMD | 1,2,4,6,8,10 Poles

Product Designations

Series Name		Shape of Operational-part	Poles		Type of Terminals	Package and contained number	Tape-seal
K	H	S	8	2		E	

Shape of Operationa-part	Symbol
Slide	S

Poles	Symbol
1	12
2	22
4	42
6	62
8	82
10	102

Type of Terminals	Symbol
Gull-wing	-
J-lead	L

※ For J-lead, 1 Pole is not available.

Package	Symbol
Magazine (Gull-wing)	C
Magazine (J-lead)	L
Tape-reel (2,000 pcs/reel)	E
Tape-reel (100pcs/reel)	E100
Tape-reel (500pcs/reel)	EF

tape-seal	Symbol
With	-
Without	-2

Standard Dimensions (Gull-wing)

Gull-wing KHS □□□□

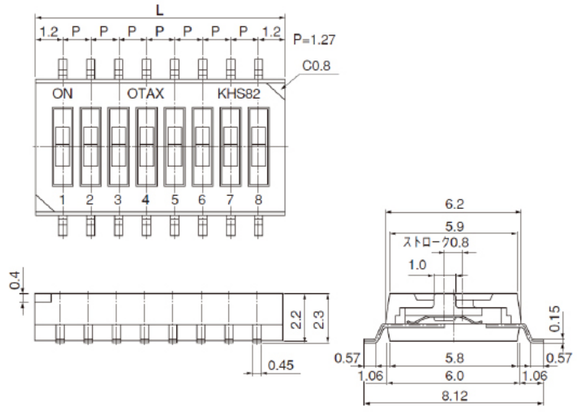

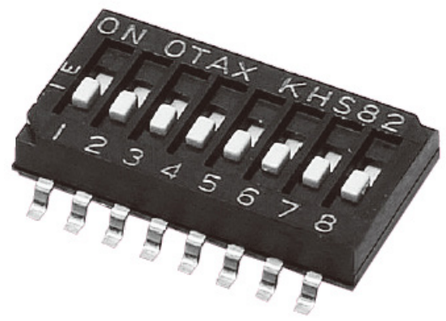

Mounting Land Dimensions

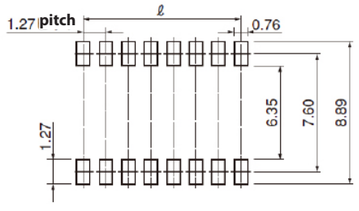

Product Names and Dimensions

Product Name	Poles	L (mm)	ℓ (mm)
KHS12 □□	1	2.40	0.00
KHS22 □□	2	3.67	1.27
KHS42 □□	4	6.21	3.81
KHS62 □□	6	8.75	6.35
KHS82 □□	8	11.29	8.89
KHS102 □□	10	13.83	11.43

* For products other than those listed above or for custom items, please contact us.

OTAX Co., Ltd.
1215, Nippacho, Kohoku-ward,
Yokohama, Kanagawa, 223-8558 Japan
TEL: +81-45-543-5621 (Representative)
Mail: sales@otax.co.jp
HP: https://www.otax-en.com/

DIP Switch | KHS Series | DIP Slide | SMD | 1,2,4,6,8,10 Poles

Standard Dimensions（J-lead）

J-lead KHS □□ L □□

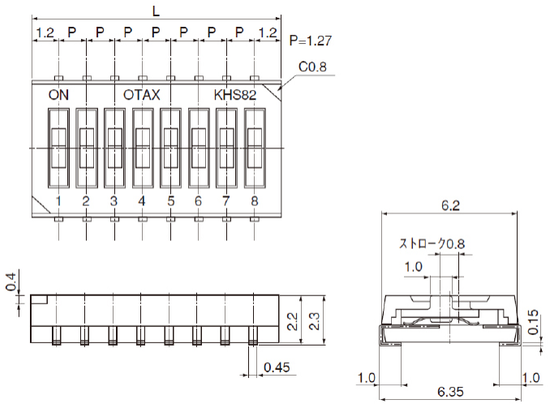

Mounting Land Dimensions

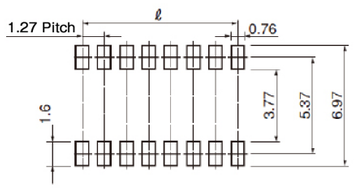

Product Names and Dimensions

Product Name	Poles	L (mm)	ℓ (mm)
KHS22L □□	2	3.67	1.27
KHS42L □□	4	6.21	3.81
KHS62L □□	6	8.75	6.35
KHS82L □□	8	11.29	8.89
KHS102L □□	10	13.83	11.43

Soldering Conditions

＊ Regarding the Soldering Conditions, please refer to the separate data sheet.（Hand Soldering Condition is B.）

Cautions on Handling Products

1. Cleaning agents such as alcohol-based, petroleum-based, ketone-based, and chlorine-based solvents can be used.
2. The conditions for reflow soldering may vary depending on the dimensions of the printed circuit board and the assembly density in the actual production process. Please refer to the temperature profile in the separate datasheet in advance, and confirm the surface temperature and soldering condition of the mounted product before use.

* For products other than those listed above or for custom items, please contact us.

OTAX Co., Ltd.
1215, Nippacho, Kohoku-ward,
Yokohama, Kanagawa, 223-8558 Japan
otax
TEL: +81-45-543-5621（Representative）
Mail: sales@otax.co.jp
HP: https://www.otax-en.com/

DIP Switch | KHS Series | DIP Slide | SMD | 1,2,4,6,8,10 Poles

Details of Quantity in each Package

Poles	Q'ty per 1 Magazine (pcs)	Q'ty of Magazine per 1 Box (sticks)	Total Q'ty per one box
1	195	100	19,500
2	125	100	12,500
4	70	100	7,000
6	50	100	5,000
8	40	100	4,000
10	30	100	3,000

Specifications of Tape-reel Packages

Gull-wing Terminals

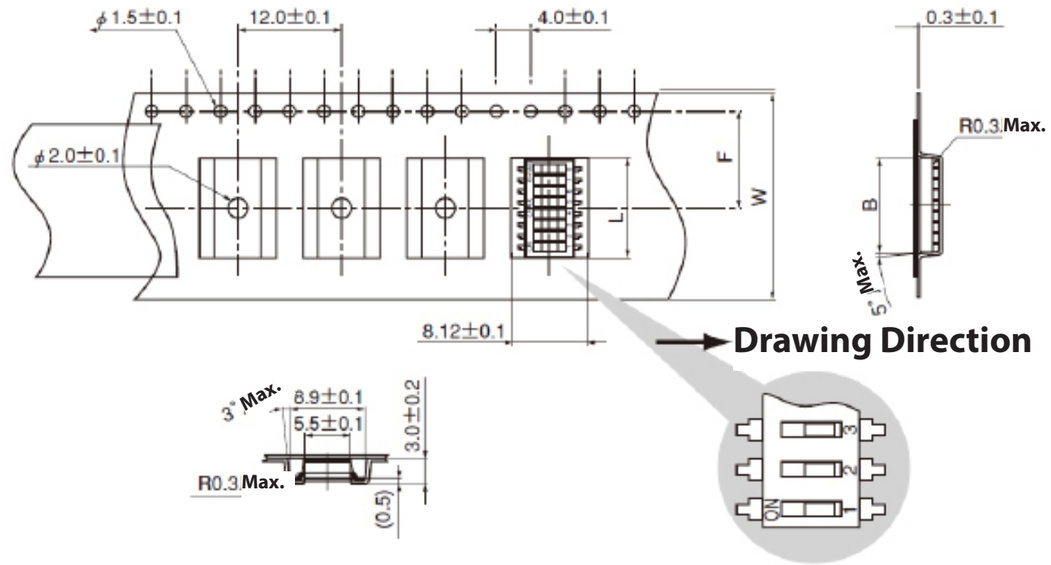

Poles	W±0.3	F±0.1	B±0.1	L±0.5
1	16.0	7.5	3.18	2.40
2			4.45	3.67
4			7.00	6.21
6			9.55	8.75
8	24.0	11.5	12.10	11.29
10			14.60	13.83

Applied Standards

JIS C 0806
TB0804～TB2420
EIA-481-A
16, 24mm Embossed Tape

* For products other than those listed above or for custom items, please contact us.

OTAX Co., Ltd.
1215, Nippacho, Kohoku-ward,
Yokohama, Kanagawa, 223-8558 Japan
otax
TEL: +81-45-543-5621（Representative）
Mail: sales@otax.co.jp
HP: https://www.otax-en.com/

J-lead Terminals

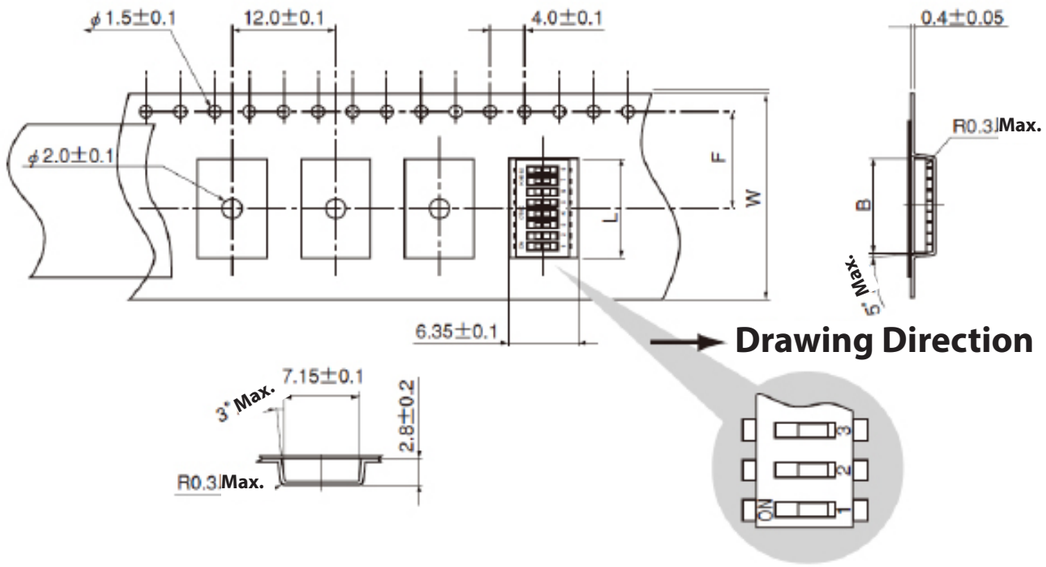

Poles	W±0.3	F±0.1	B±0.1	L±0.5
2	16.0	7.5	4.45	3.67
4			7.00	6.21
6			9.55	8.75
8	24.0	11.5	12.10	11.29
10			14.60	13.83

Applied Standards

JIS C 0806
TB0804 ～ TB2420
EIA-481-A
16, 24mm Embossed Tape

* For products other than those listed above or for custom items, please contact us.

OTAX Co., Ltd.
1215, Nippacho, Kohoku-ward,
Yokohama, Kanagawa, 223-8558 Japan
TEL: +81-45-543-5621（Representative）
Mail: sales@otax.co.jp
HP: https://www.otax-en.com/

DIP Switch | KHS Series | DIP Slide | SMD | 1,2,4,6,8,10 Poles

Tips for Switches

Pull-up and Pull-down of a microprocessor

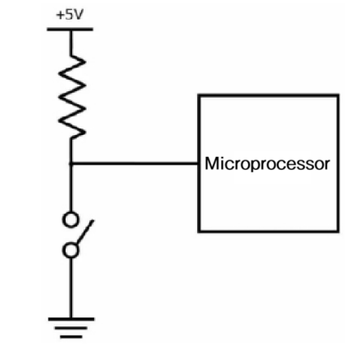

Pull-up Circuit

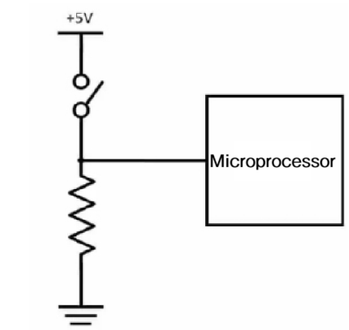

Pull-down Circuit

As a fundamental concept of microprocessors, one of the common stumbling blocks when first creating circuits using a microprocessor is understanding pull-up and pull-down resistors. As you may know, microprocessors operate using digital control with two values: High (1) and Low (0). Typically, the High level is connected to a power supply voltage known as Vdd (e.g., 5V, 3.3V, 1.7V, etc.). On the other hand, assuming that an unconnected pin will naturally be Low (0) is, in a sense, incorrect. This is because when a microprocessor's pin is left unconnected, it is said to be "floating" or in a "Hi-Z (high impedance)" state, which is electrically unstable and prone to noise and interference.

Therefore, it is standard practice to connect each pin to either the power supply (Vdd) or ground (Vss) through a resistor. When connected to Vdd, this is called a "pull-up" (which sets the default state to High), and when connected to Vss, it is called a "pull-down" (which sets the default state to Low). This approach electrically forces each pin into either the High or Low state.

Incidentally, in the case of a pull-up configuration, if a DIP switch is connected, turning the switch ON connects the line to ground, resulting in a digital Low (0). When the switch is OFF, the line remains pulled up to High (1).

* For products other than those listed above or for custom items, please contact us.

OTAX Co., Ltd.
1215, Nippacho, Kohoku-ward,
Yokohama, Kanagawa, 223-8558 Japan
TEL: +81-45-543-5621（Representative）
Mail: sales@otax.co.jp
HP: https://www.otax-en.com/

DIP Switch KY Series

DIP Slide | Through Hole・SMD | 2,4,6,8,10 Poles

Slide Type/ SMD

Slide Type/
Through Hole Mounting

Outline of the Series

This ultra-low-profile slide-type switch supports end-to-end mounting, making multi-pole configurations easy.

Features of the Series

1. Ultra-compact internal mechanism enables end-stackable configuration (continuous mounting along the longitudinal direction).
2. Maintains a 2.54 mm pitch while allowing multi-pole combinations such as 16 and 24 positions.
3. Ultra-thin design with a thickness of only 2.6 mm.
4. Gold-plated contacts are provided as a standard finish.
5. All models come with tape sealing, making them compatible with automatic cleaning.
6. The Series are RoHS (2011/65/EU) compliant.

Structure

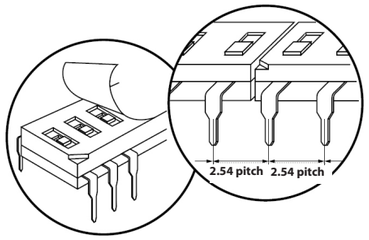

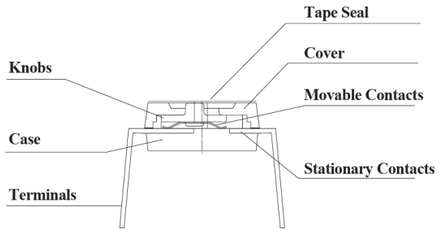

Through Hole Mounting Type

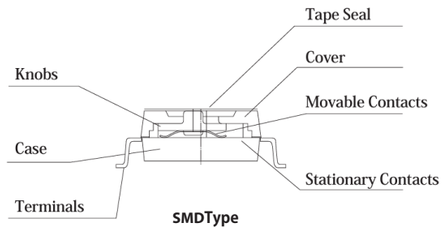

SMDType

Common Specifications

Ratings	DC24V 25mA
Contact Resistance	100 mΩ Max. (Initial value)
Withstanding Voltage	AC300V 1 Minute
Insulating Resistance	100MΩ Min.
Electrical Life	1,000 times
Operating Temperature Range	-30℃～ +85℃
Storage Temperature Range	-30℃～ +85℃
Operating Force	5.9N Max.
Number of Re-flow	2 times Max.

Specifications of Materials

Part Name	Materials	Finish
Knob	LCP	White
Cover	PPS	Black
Case	PPS	Black
Terminals (excl. Contacts)	Copper Alloy	Gold Flash
Movable Plate (Movable Contact)	Copper Alloy	Gold Plating
Fixed Plate (Fixed Contact)	Copper Alloy	Gold Plating

* For products other than those listed above or for custom items, please contact us.

OTAX Co., Ltd.
1215, Nippacho, Kohoku-ward,
Yokohama, Kanagawa, 223-8558 Japan

TEL: +81-45-543-5621 (Representative)
Mail: sales@otax.co.jp
HP: https://www.otax-en.com/

DIP Switch KY Series

DIP Slide | Through Hole・SMD | 2,4,6,8,10 Poles

Product Designations

Series Name		Shape of Operational-part	Poles		Type of Terminals	Package
K	Y	S	8	2	S	E

Shape of Operational-part	Symbol
Slide	S

Poles	Symbol
2	22
4	42
6	62
8	82
10	102

Type of Terminals	Symbol
Through Hole Mounting	(none)
SMD	S

Package	Symbol
Magazine	(none)
Tape-reel (SMD only)	E

Standard Dimensions (Through Hole MountingType)

Slide Type KYS □□□

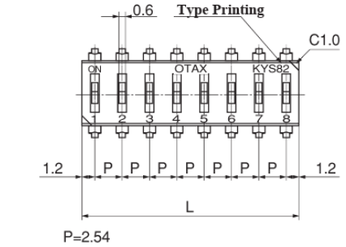

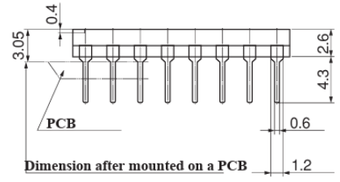

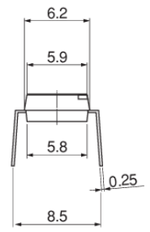

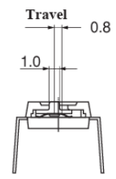

Mounting Hole Dimensions

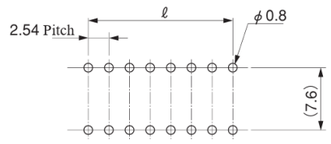

(Seen from the top)

Product Names and Dimensions

Product Name	Poles	L (mm)	ℓ (mm)
KYS22	2	4.94	2.54
KYS42	4	10.02	7.62
KYS62	6	15.10	12.70
KYS82	8	20.18	17.78
KYS102	10	25.26	22.86

* For products other than those listed above or for custom items, please contact us.

OTAX Co., Ltd.
1215, Nippacho, Kohoku-ward,
Yokohama, Kanagawa, 223-8558 Japan

TEL: +81-45-543-5621 (Representative)
Mail: sales@otax.co.jp
HP: https://www.otax-en.com/

DIP Switch | KY Series | DIP Slide | Through Hole • SMD | 2,4,6,8,10 Poles

Standard Dimensions（SMD Type）

Slide Type KYS □□ S □

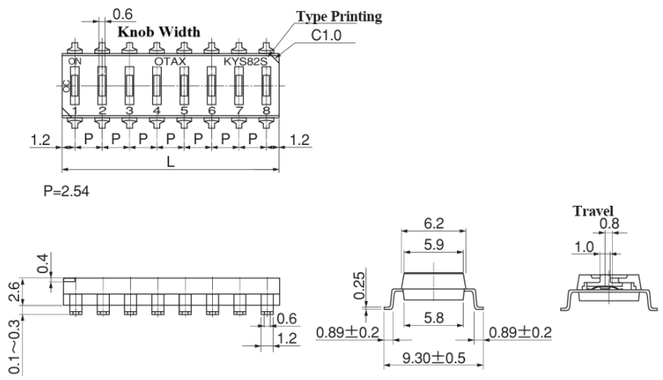

Mounting Land Dimensions

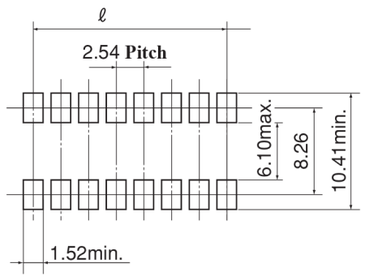

Product Names and Dimensions

Produt Name	Poles	L (mm)	ℓ (mm)
KYS22S □	2	4.94	2.54
KYS42S □	4	10.02	7.62
KYS62S □	6	15.10	12.70
KYS82S □	8	20.18	17.78
KYS102S □	10	25.26	22.86

Soldering Conditions

＊ Regarding the Soldering Conditions, please refer to the separate data sheet.（Hand Soldering Condition is B.）

Cautions on Handling Products

1. Cleaning agents such as alcohol-based, petroleum-based, ketone-based, and chlorine-based solvents can be used.
2. The conditions for reflow soldering may vary depending on the dimensions of the printed circuit board and the assembly density in the actual production process. Please refer to the temperature profile in the separate datasheet in advance, and confirm the surface temperature and soldering condition of the mounted product before use.

* For products other than those listed above or for custom items, please contact us.

OTAX Co., Ltd.
1215, Nippacho, Kohoku-ward,
Yokohama, Kanagawa, 223-8558 Japan
TEL: +81-45-543-5621（Representative）
Mail: sales@otax.co.jp
HP: https://www.otax-en.com/

DIP Switch | KY Series | DIP Slide | Through Hole • SMD | 2,4,6,8,10 Poles

Packagning Q'ty for Box, Magazine and Reel

Poles	Q'ty per 1 Magagine (pcs)	Q'ty of Magagine per 1 Box (pcs)	Total Q'ty per 1 box
2	90	60	5,400
4	40	60	2,400
6	30	60	1,800
8	20	60	1,200
10	15	67	1,000 (The last Magazine contains only 10 pcs.)

Poles	Total Q'ty per 1 Reel（pcs）
2	1,000
4	1,000
6	1,000
8	1,000
10	800

Specifications of Tape-reel Package

Gull-wing Terminals

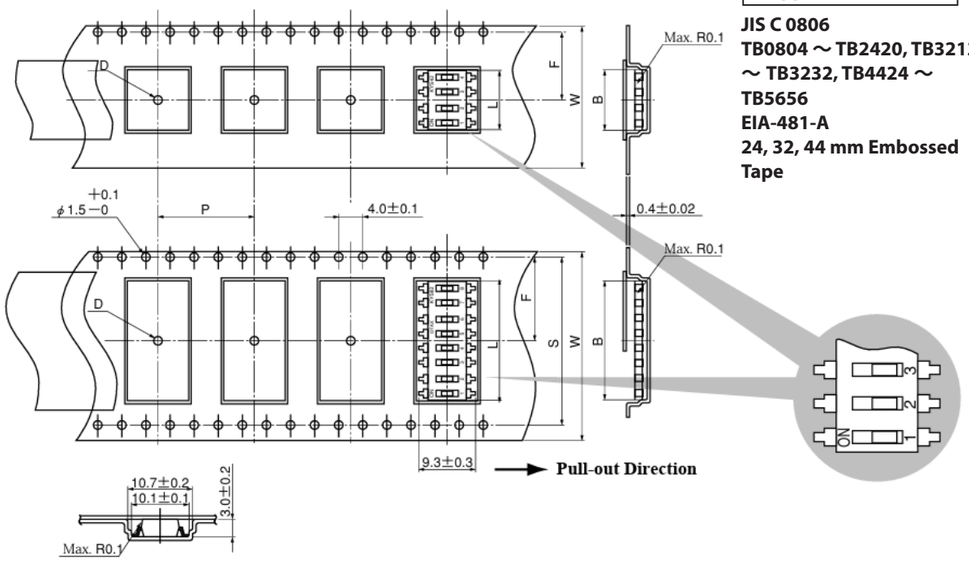

Applied Standards

JIS C 0806
TB0804 ～ TB2420, TB3212 ～ TB3232, TB4424 ～ TB5656
EIA-481-A
24, 32, 44 mm Embossed Tape

Poles	W±0.3	S±0.1	F±0.1	B±0.1	L±0.5	D+0.1/-0	P±0.1
2	24.0		11.5	5.3	4.94	φ1.50	16.0
4				10.4	10.02		
6				15.4	15.10		
8	32.0	28.4	14.2	20.5	20.18	φ2.00	
10	44.0	40.4	20.2	25.6	25.26		24.0

* For products other than those listed above or for custom items, please contact us.

OTAX Co., Ltd.
1215, Nippacho, Kohoku-ward,
Yokohama, Kanagawa, 223-8558 Japan
TEL: +81-45-543-5621（Representative）
Mail: sales@otax.co.jp
HP: https://www.otax-en.com/

DIP Switch | KJ Series | DIP Slide | SMD | SP

Outline of the Series

Ultra-miniature SMD type Jumper Switch.

Features of the Series

1. Supports automatic mounting, reflow soldering, and cleaning (with tape sealing).
2. Features highly reliable gold-plated contacts.
3. Compliant with RoHS II.
4. Tape reel packaging is available in quantities of 1,000 or 100 pieces.

Structure and Materials

Specifications of Materials

Part Name	Materials	Finish
① Case	PPS	Black
② Fixed Plate（Fixed Contact）	Copper Alloy	Gold Plating
③ Movable Plate（Movable Contact）	Copper Alloy	Gold Plating
④ Knob	LCP	White
⑤ Cover	PPS	Black
⑥ Tape-seal	Polyimide	—

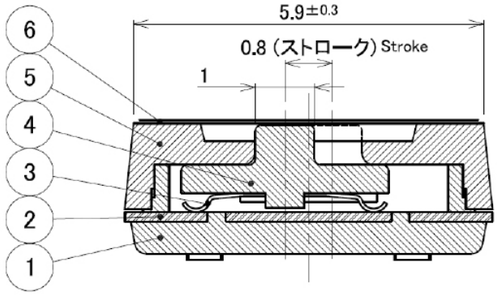

Common Specifications

Ratings	DC24V　25mA
Contact Resistance	100 mΩ Max. (Initial value))
Withstanding Voltage	AC250V　1 Minute
Insulating Resistance	Min. 100MΩ
Electrical Life	200 times
Operating Temperature Range	-40℃～ +85℃
Storage Temperature Range	-40℃～ +85℃
Operating Force	4.9N Max.
Number of Re-flow	2 times Max.

Soldering Conditions

＊ Regarding the Soldering Conditions, please refer to the separate data sheet.（Hand Soldering Condition is B.)

Cautions on Handling Products

1. The conditions for reflow soldering may vary depending on the dimensions of the printed circuit board and the assembly density in the actual production process. Please refer to the temperature profile in the separate datasheet in advance, and confirm the surface temperature and soldering condition of the mounted product before use.

* For products other than those listed above or for custom items, please contact us.

OTAX Co., Ltd.
1215, Nippacho, Kohoku-ward,
Yokohama, Kanagawa, 223-8558 Japan
otax
TEL: +81-45-543-5621（Representative）
Mail: sales@otax.co.jp
HP: https://www.otax-en.com/

DIP Switch | KJ Series | DIP Slide | SMD | SP

Product Designations

Series Name	Shape of Operationa-part	Poles		Circuit	Packaging	Tape-seal
K	J	S	1	2	A	E100	-2

Shape of Operationa-part	Symbol
Slide	S

Poles	Symbol
1	12

Package	Symbol
Tape-reel（1,000 pcs/reel))	—
Tape-reel（100pcs/reel）	E100

Circuit	Symbol
ON-OFF-ON	—
ON-ON	A

Tape-seal	Symbol
Applied	—
Not Applied	-2

Standard Dimensions/Mounting Land Dimensions/Circuit Diagram

ON-ON Type

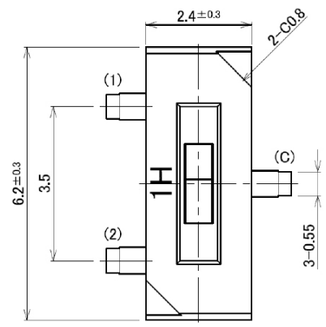

ON-OFF-ON Type

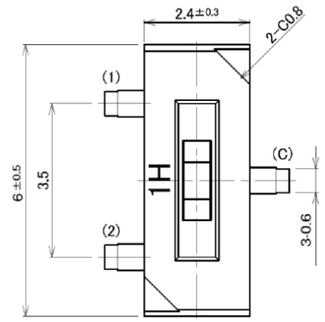

Side (Common)

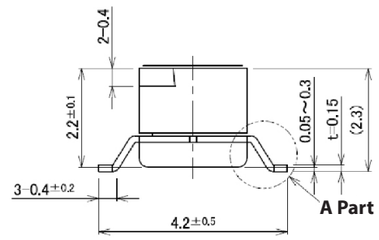

A Part

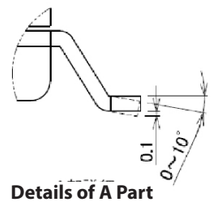

Details of A Part

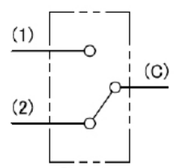

Circuit Diagram

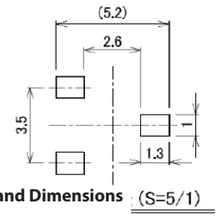

Land Dimensions (S=5/1)

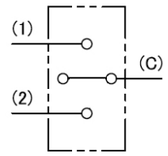

Circuit Diagram

(Common)

* For products other than those listed above or for custom items, please contact us.

OTAX Co., Ltd.
1215, Nippacho, Kohoku-ward,
Yokohama, Kanagawa, 223-8558 Japan
otax
TEL: +81-45-543-5621（Representative）
Mail: sales@otax.co.jp
HP: https://www.otax-en.com/

DIP Switch | KSP Series | DIP Piano | Through Hole・SMD | 2 ～ 10P

PianoType/
Through Hole Mounting

PianoType/SMD

Outline of the Series

This is the flagship DIP switch series from OTAX Corporation, a global leader in DIP switch production.

Features of the Series

1. The knife-edge, high-pressure contact mechanism ensures stable connection even at micro-currents.
2. The high contact pressure prevents malfunctions caused by vibration and shock.
3. The terminal shape and external dimensions are equivalent to those of DIP-type semiconductor packages, allowing for easy automatic mounting.

■ Knife-edge High-pressure Contact

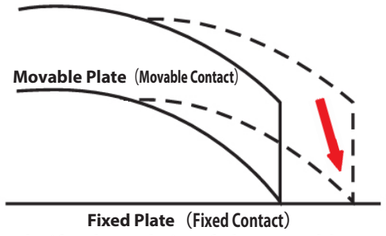

The knife-shaped tip of the movable contact penetrates into the fixed contact, providing a contact structure that is highly resistant to surface contamination and foreign particles.

■ Structure

Through Hole Type

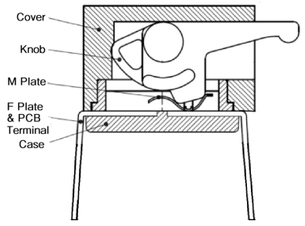

SMDType

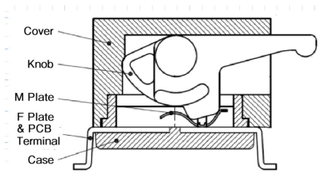

Common Specifications

Ratings	DC5V　10mA
Contact Resistance	50 mΩ Max. (Initial value)
Withstanding Voltage	AC300V　1 Minute
Insulating Resistance	100MΩMin.
Electrical Life	1,000 times
Operating Temperature Range	-40℃～ +85℃
Storing Temperature Range	-40℃～ +85℃
Storage Humidity Range	85%RHMax.、Non-condensing
Operating Force	7.9N Max.
Number of Re-flow	2 回 Max.

Specifications of Materials

Part Name	Materials	Finish
Knob	Heat-resistant Polyamide	White
Cover	PPS	Black
Case	PPS	Black
Movable Plate（Movable Contact）	Copper Alloy	Gold Plating
Fixed Plate（Fixed Contact）	Copper Alloy	Gold Plating（Contact only）

* For products other than those listed above or for custom items, please contact us.

OTAX Co., Ltd.
1215, Nippacho, Kohoku-ward,
Yokohama, Kanagawa, 223-8558 Japan
otax
TEL: +81-45-543-5621（Representative）
Mail: sales@otax.co.jp
HP: https://www.otax-en.com/

DIP Switch | KSP Series | DIP Piano | Through Hole・SMD | 2 ～ 10P

Product Designations

Series Name	Shape of Operational-part	Poles		Type of Terminals	Package
K	S	P	8	2	S	E

Shape of Operational-part	Symbol
Piano	P
Piano（Down OFF）	PA

Poles	Symbol
2	22
3	32
4	42
5	52
6	62
7	72
8	82
9	92
10	102

Type of Terminals	Symbol
Through Hole Mounting	(none)
SMD	S

Package	Symbol
Magazine	(none)
Tape-reel（SMD only）（500 pcs / reel）	E

Standard Dimensions（Through Hole Mountin Type）

PianoType　KSP □□□

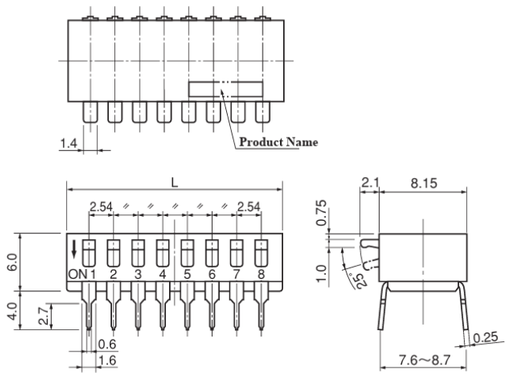

Piano（Down OFF）TypeKSPA □□□

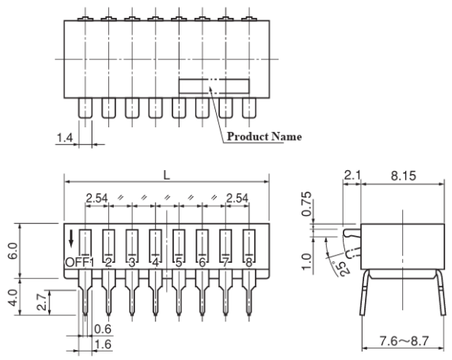

Mounting Hole Dimensions

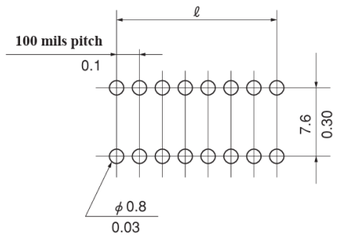

Product Names and Dimensions

Product Name	Poles	L (mm)	ℓ (mm)
KSP22	2	7.0	2.54
KSPA22			
KSP32	3	9.6	5.08
KSPA32			
KSP42	4	12.1	7.62
KSPA42			
KSP52	5	14.6	10.16
KSPA52			
KSP62	6	17.2	12.70
KSPA62			

Product Name	Poles	L (mm)	ℓ (mm)
KSP72	7	19.7	15.24
KSPA72			
KSP82	8	22.3	17.78
KSPA82			
KSP92	9	24.8	20.32
KSPA92			
KSP102	10	27.3	22.86
KSPA102			

* For products other than those listed above or for custom items, please contact us.

OTAX Co., Ltd.
1215, Nippacho, Kohoku-ward,
Yokohama, Kanagawa, 223-8558 Japan
otax
TEL: +81-45-543-5621（Representative）
Mail: sales@otax.co.jp
HP: https://www.otax-en.com/

DIP Switch | KSP Series | DIP Piano | Through Hole・SMD | 2 ～ 10P

Standard Dimensions（SMDType）

PianoType　KSP □□ S

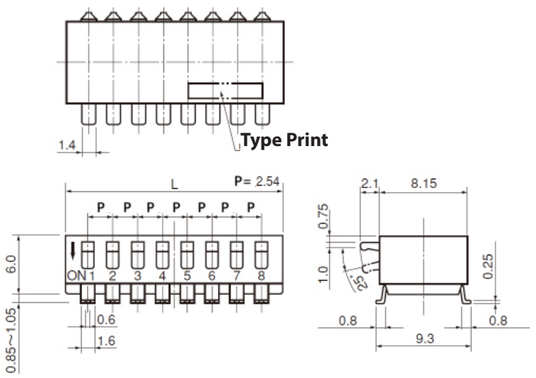

Piano（Down OFF）TypeKSPA □□ S □

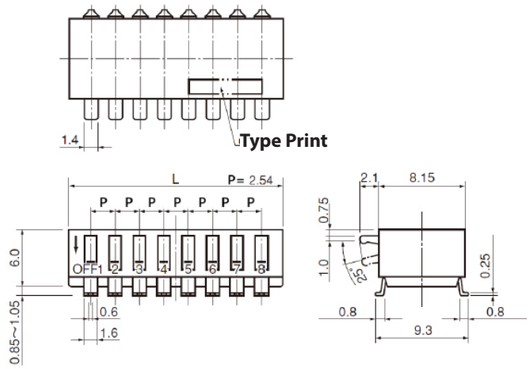

Mounting Land Dimensions

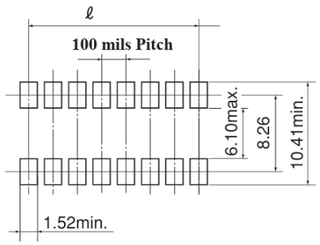

Product Names and Dimensions

Product Name	Poles	L (mm)	ℓ (mm)
KSP22S □	2	7.0	2.54
KSPA22S □			
KSP32S □	3	9.6	5.08
KSPA32S □			
KSP42S □	4	12.1	7.62
KSPA42S □			
KSP52S □	5	14.6	10.16
KSPA52S □			
KSP62S □	6	17.2	12.70
KSPA62S □			

Product Name	Poles	L (mm)	ℓ (mm)
KSP72S □	7	19.7	15.24
KSPA72S □			
KSP82S □	8	22.3	17.78
KSPA82S □			
KSP92S □	9	24.8	20.32
KSPA92S □			
KSP102S □	10	27.3	22.86
KSPA102S □			

Soldering Conditions

＊ **Regarding the Soldering Conditions, please refer to the separate data sheet.（Hand Soldering Condition is A.)**

Cautions on Handling Products

1. **Cleaning agents such as alcohol-based, petroleum-based, ketone-based, and chlorine-based solvents can be used.**
2. **The conditions for reflow soldering may vary depending on the dimensions of the printed circuit board and the assembly density in the actual production process. Please refer to the temperature profile in the separate datasheet in advance, and confirm the surface temperature and soldering condition of the mounted product before use.**
3. **The knob is set to the OFF position upon delivery. Please keep it in this position through mounting, soldering, and cleaning processes.**

*** For products other than those listed above or for custom items, please contact us.**

OTAX Co., Ltd.
1215, Nippacho, Kohoku-ward,
Yokohama, Kanagawa, 223-8558 Japan
TEL: +81-45-543-5621（Representative）
Mail: sales@otax.co.jp
HP: https://www.otax-en.com/

DIP Switch | KSP Series | DIP Piano | Through Hole・SMD | 2 ～ 10P

Specifications of Box, Magaine and Reel

Q'ty in Box, Magazine

Poles	Q'ty per 1 Magazine (pcs)	Q'ty of Magagines per 1 Box (pcs)	Total Q'ty per 1 Box (pcs)
2	60	30	1,800
3	45	30	1,350
4	35	30	1,050
5	30	30	900
6	25	30	750
7	20	30	600
8	20	30	600
9	15	30	450
10	15	30	450

Tape-reel Dimension（DP ～ 5P）

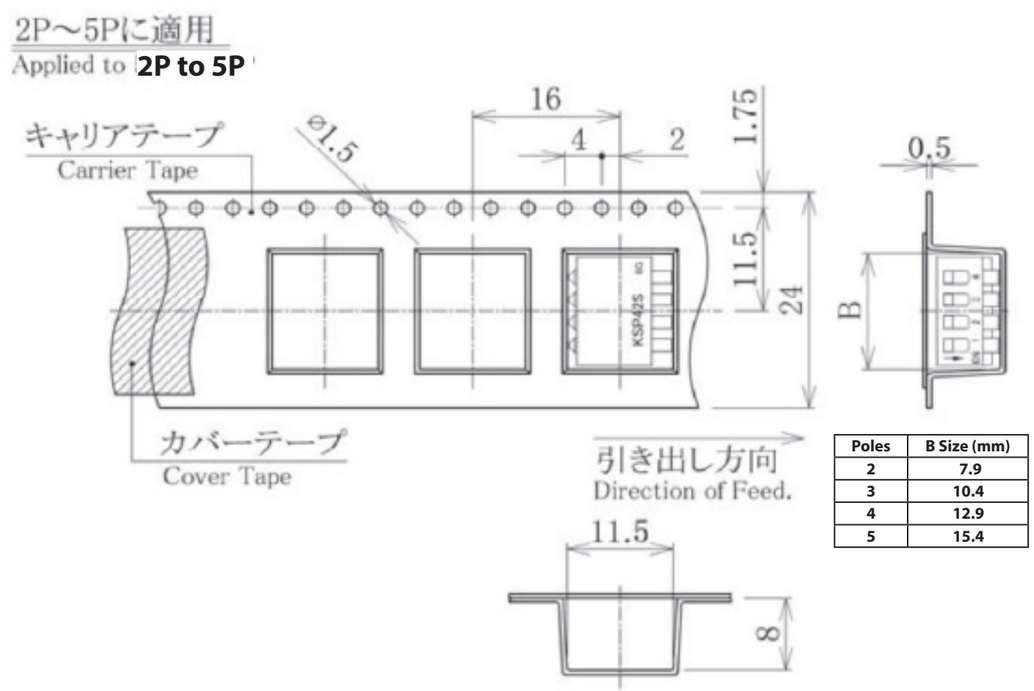

Poles	B Size (mm)
2	7.9
3	10.4
4	12.9
5	15.4

*** For products other than those listed above or for custom items, please contact us.**

OTAX Co., Ltd.
1215, Nippacho, Kohoku-ward,
Yokohama, Kanagawa, 223-8558 Japan
TEL: +81-45-543-5621（Representative）
Mail: sales@otax.co.jp
HP: https://www.otax-en.com/

Tape-reel Dimensions（6P ～ 10P）

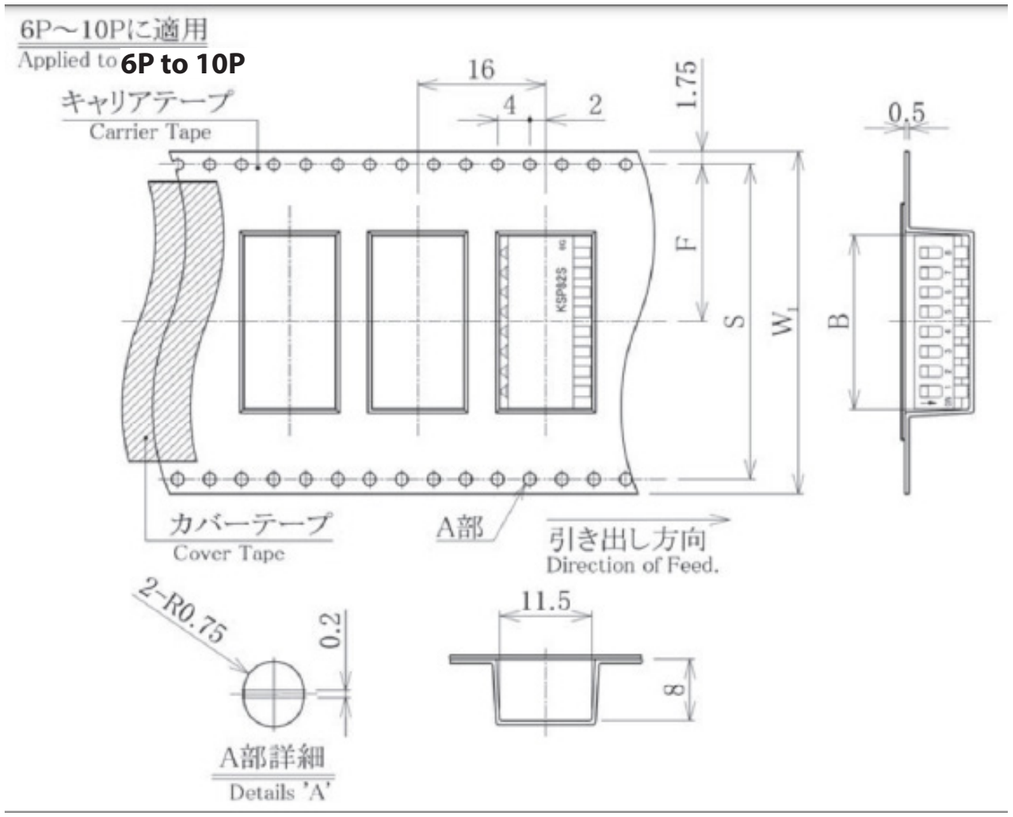

The Dimension of each part（mm）

Poles	W_1	S	F	B
6	32.0	28.4	14.2	18.0
7				20.5
8	44.0	40.4	20.2	22.7
9				25.5
10				28.1

* For products other than those listed above or for custom items, please contact us.

OTAX Co., Ltd.
1215, Nippacho, Kohoku-ward,
Yokohama, Kanagawa, 223-8558 Japan
TEL: +81-45-543-5621（Representative）
Mail: sales@otax.co.jp
HP: https://www.otax-en.com/

DIP Switch | KSP Series | DIP Piano | Through Hole・SMD | 2 ～ 10P

Tips for Switches

Pull-up and Pull-down of a microprocessor

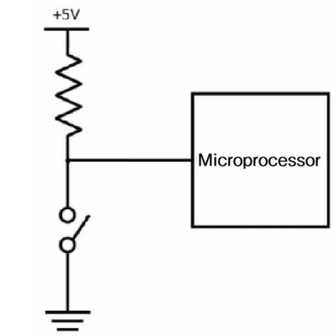

Pull-up Circuit

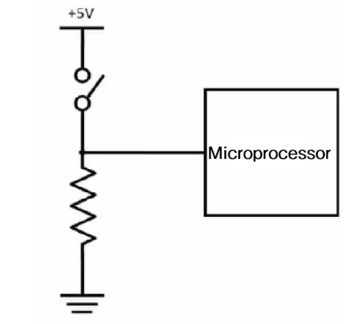

Pull-down Circuit

As a fundamental concept of microprocessors, one of the common stumbling blocks when first creating circuits using a microprocessor is understanding pull-up and pull-down resistors. As you may know, microprocessors operate using digital control with two values: High (1) and Low (0). Typically, the High level is connected to a power supply voltage known as Vdd (e.g., 5V, 3.3V, 1.7V, etc.). On the other hand, assuming that an unconnected pin will naturally be Low (0) is, in a sense, incorrect. This is because when a microprocessor's pin is left unconnected, it is said to be "floating" or in a "Hi-Z (high impedance)" state, which is electrically unstable and prone to noise and interference.

Therefore, it is standard practice to connect each pin to either the power supply (Vdd) or ground (Vss) through a resistor. When connected to Vdd, this is called a "pull-up" (which sets the default state to High), and when connected to Vss, it is called a "pull-down" (which sets the default state to Low). This approach electrically forces each pin into either the High or Low state.

Incidentally, in the case of a pull-up configuration, if a DIP switch is connected, turning the switch ON connects the line to ground, resulting in a digital Low (0). When the switch is OFF, the line remains pulled up to High (1).

* For products other than those listed above or for custom items, please contact us.

OTAX Co., Ltd.
1215, Nippacho, Kohoku-ward,
Yokohama, Kanagawa, 223-8558 Japan
TEL: +81-45-543-5621（Representative）
Mail: sales@otax.co.jp
HP: https://www.otax-en.com/

DIP Switch | KHP Series | DIP Piano | SMD | 2, 4, 6, 8, 10 Poles

PianoType/ SMD

Outline of the Series

This is an ultra-compact piano-type DIP switch with half-pitch spacing, suitable for high-density mounting.

Features of the Series

1. Achieves ultra-miniaturization with a half-pitch (P = 1.27 mm) through a highly compact internal mechanism.
2. Enables high-density mounting (approximately 40% of the volume of our conventional 8-pole model).
3. Contacts feature a twin-contact gold-plated structure for high contact reliability as a standard specification.
4. Available in both tape-and-reel and magazine packaging formats.

Common Specifications

Ratings	DC24V 25mA
Contact Resistance	100 mΩ Max. (Initial value)
Withstanding Voltage	AC300V 1 Minute
Insulating Resistance	100MΩMin.
Electrical Life	1,000 times
Operating Temperature Range	-30℃～ +85℃
Storing Temperature Range	-40℃～ +85℃
Storage Humidity Range	85%RHMax., No-condensation
Operating Force	4.9N Max.
Number of Re-flow	2 times max.

Specifications of Materials

Part Name	Materials	Finish
Knob	LCP	White
Cover	PPS	Black
Case	PPS	Black
Movable Plate (Movable Contact)	Copper Alloy	Gold Plating
Fixed Plate (Fixed Contact)	Copper Alloy	Gold Plating
Terminals	Copper Alloy	Gold Flash

Product Designations

Series Name	Shape of Operational-part	Poles		Package
K	H	P	8	2	C

Shape of Operational-part	Symbol
Piano	P

Poles	Symbol
2	22
4	42
6	62
8	82
10	102

Package	Symbol
Magazine	C
Tape-reel (1,000 pcs / reel)	E

* For products other than those listed above or for custom items, please contact us.

OTAX Co., Ltd.
1215, Nippacho, Kohoku-ward,
Yokohama, Kanagawa, 223-8558 Japan

otax

TEL: +81-45-543-5621 (Representative)
Mail: sales@otax.co.jp
HP: https://www.otax-en.com/

DIP Switch | KHP Series | DIP Piano | SMD | 2, 4, 6, 8, 10 Poles

Standard Dimensions

KHP □□□

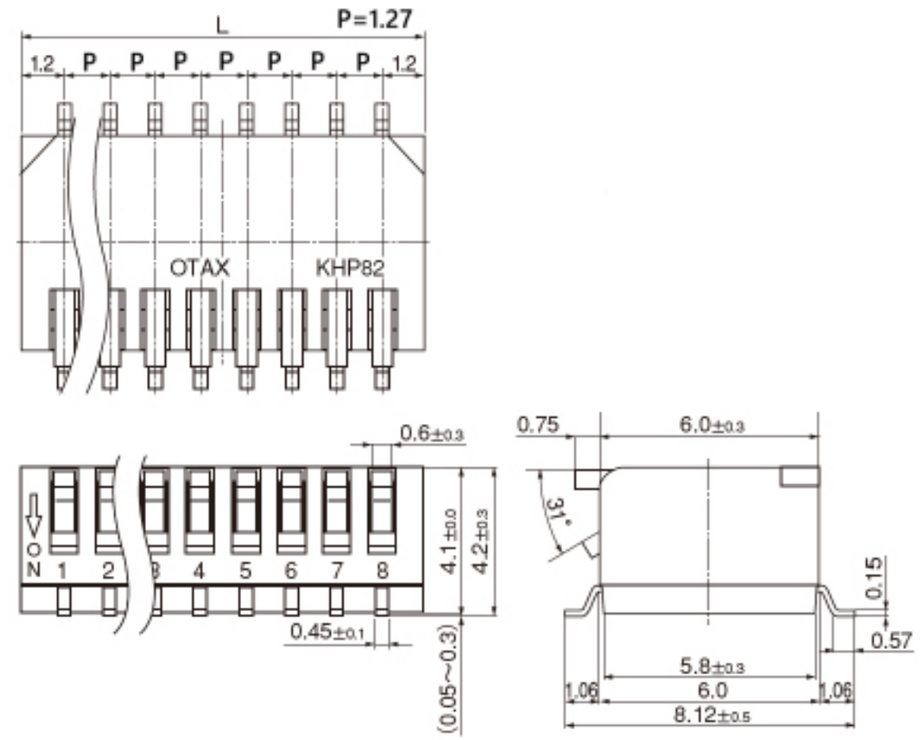

Mounting Land Dimensions

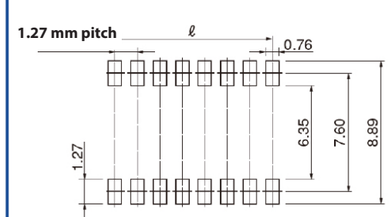

Product Names and Dimensions

品名	Poles	L (mm)	ℓ (mm)
KHP22 □	2	3.67	1.27
KHP42 □	4	6.21	3.81
KHP62 □	6	8.75	6.35
KHP82 □	8	11.29	8.89
KHP102 □	10	13.83	11.43

* For products other than those listed above or for custom items, please contact us.

OTAX Co., Ltd.
1215, Nippacho, Kohoku-ward,
Yokohama, Kanagawa, 223-8558 Japan

otax

TEL: +81-45-543-5621 (Representative)
Mail: sales@otax.co.jp
HP: https://www.otax-en.com/

Soldering Conditions

＊ **Regarding the Soldering Conditions, please refer to the separate data sheet.（Hand Soldering Condition is A.)**

Cautions on Handling Products

1. **The conditions for reflow soldering may vary depending on the dimensions of the printed circuit board and the assembly density in the actual production process. Please refer to the temperature profile in the separate datasheet in advance, and confirm the surface temperature and soldering condition of the mounted product before use.**
2. **The knob is set to the OFF position upon delivery. Please keep it in this position through mounting, soldering, and cleaning processes.**

Specifications of Box, Magazine and Tape-reel

Q'ty in Magazine and in Box

Poles	Q'ty per 1 Magazine (pcs)	Q'ty of Magazine per 1 Box (pcs)	Total Q'ty per one Box
2	125	100	12,500
4	70	100	7,000
6	50	100	5,000
8	40	100	4,000
10	30	100	3,000

*** For products other than those listed above or for custom items, please contact us.**

OTAX Co., Ltd.
1215, Nippacho, Kohoku-ward,
Yokohama, Kanagawa, 223-8558 Japan

TEL: +81-45-543-5621（Representative）
Mail: sales@otax.co.jp
HP: https://www.otax-en.com/

DIP Switch | KHP Series | DIP Piano | SMD | 2, 4, 6, 8, 10 Poles

Tape-reel Dimensions

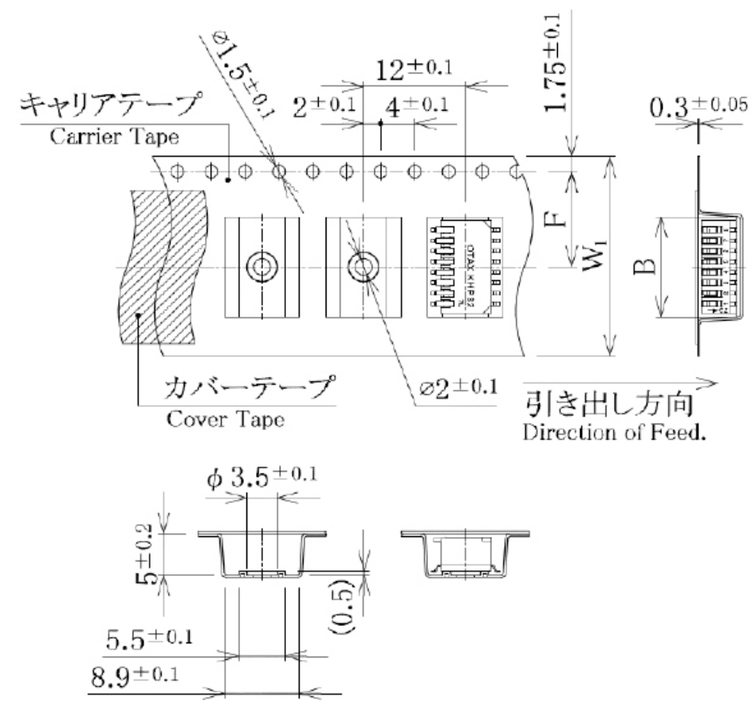

Poles	W±0.3	F±0.1	B±0.1	L±0.5
2	16.0	7.5	4.45	3.67
4			7.00	6.21
6			9.55	8.75
8	24.0	11.5	12.10	11.29
10			14.60	13.83

Applied Standards

JIS C 0806
TB0804 ～ TB2420
EIA-481-A
16, 24mm Embossed Tape

*** For products other than those listed above or for custom items, please contact us.**

OTAX Co., Ltd.
1215, Nippacho, Kohoku-ward,
Yokohama, Kanagawa, 223-8558 Japan

TEL: +81-45-543-5621（Representative）
Mail: sales@otax.co.jp
HP: https://www.otax-en.com/

DIP Switch | KD/KM/KW Series | DIP Rotary | Through Hole • SMD | 10/16 Position Real/ Compliment

Driver Type

Mini-shaft Type

Mini-shaft + Indicator Type

Wheel Type

Outline of the Series

This is the flagship DIP switch series from OTAX Corporation, a global leader in DIP switch production.

Features of the Series

This rotary digital code switch is designed for PCB mounting and features a knife-edge, high-pressure contact mechanism combined with a steel ball detent system, providing excellent contact stability and long operating life.

Its fully sealed construction ensures smooth rotation and allows for cleaning processes.

Four types of actuators are available — driver type, mini-shaft type, mini-shaft with indicator, and wheel type — along with both vertical and horizontal mounting orientations to meet a wide range of customer needs.

■ Knife-edge High-pressure Contact

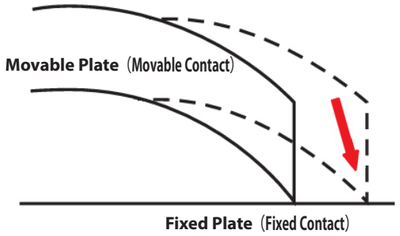

The knife-shaped tip of the movable contact penetrates into the fixed contact, providing a contact structure that is highly resistant to surface contamination and foreign particles.

■ Stable and Sure Contact Mechanism by Steel Balls

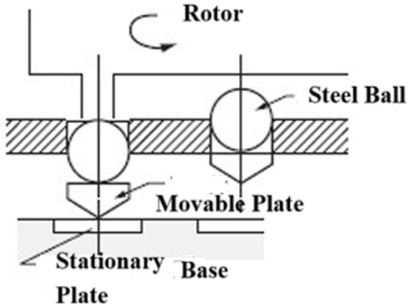

Common Specifications

Ratings	0.4VA DC20V Max.
Contact Resistance	50 mΩ Max. (Initial value)
Withstanding Voltage	AC300V 1 Minute
Insulating Resistance	1,000MΩ Min.
Electrical Life	20,000 steps
Operating Temperature Range	-30℃～ +85℃
Storage Temperature Range	-30℃～ +85℃
Storage Humidity Range	85%RHMax.、no condensation
Operating Force	98mN·m Max.
Number of Re-flow	2 times Max.

Specifications of Materials

Part Name	Materials	Finish
Case	PPS	Black
Frame	PPS	Black
Terminals	Copper Alloy	Gold Flash
Rotor（Driver Type）	Heat-resistant Polyamide	Color: Refer to the Appendix
O-ring	FPM、NBR（Indicator Type）	
Movable Plate（Movable Contact）	Copper Alloy	Gold Flash
Leaf Spring	SUS	
Fixed Plate（Fixed Contact）	Copper Alloy	Gold Flash
Steel Ball	SUJ2	
Mini-shaft	PBT	Color: Refer to the Appendix
Wheel	PBT	Color: Refer to the Appendix

* For products other than those listed above or for custom items, please contact us.

OTAX Co., Ltd.
1215, Nippacho, Kohoku-ward,
Yokohama, Kanagawa, 223-8558 Japan

TEL: +81-45-543-5621（Representative）
Mail: sales@otax.co.jp
HP: https://www.otax-en.com/

DIP Switch | KD/KM/KW Series | DIP Rotary | Through Hole • SMD | 10/16 Position Real/ Compliment

Product Designations

Series Name	Shape of Operational-part	Encoding	Number of Steps/ Operational-part			Type of Terminals	Direction of Operational-part
K	D	R	1	0	2	S	

Shape of Operational-part	Symbol
Driver	D
Mini-shaft	M
Wheel	W

Code	Symbol
Real	R
Compliment	C

Poles	Symbol
10-position/ Driver	102
10-position/ Mini-shaft • Wheel	104
10-position/ Indicator	104-3
16-position/ Driver • Mini-shaft • Wheel	162
16-position/ Indicator	162-3

Type of Terminals	Symbol
Through Hole Mounting	(none)
SMD	S

* SMD type are available only for Driver-type with vertual operational part.

Direction of Operational-part	Symbol
Vertical	(none)
Horizontal	H

Color of Operational Part/ Product Names

Operational-part	Code	10-position Color of Operational Part	10-position Product Name	16-position Color of Operational Part	16-position Product Name
Driver	Real	Black	KDR102 □□	Black	KDR162 □□
	Compliment	Amber	KDC102 □□	White	KDC162 □□
Mini-shaft	Real	Black	KMR104 □	Black	KMR162 □
	Compliment	White	KMC104 □	White	KMC162 □
Wheel	Real	Black	KWR104 □	Black	KWR162 □
	Compliment	White	KWC104 □	White	KWC162 □
Mini-shaft + Indicator	Real	Black	KMR104-3 □	Black	KMR162-3 □
	Compliment	Black	KMC104-3 □	Black	KMC162-3 □

Q'ty contained in a Box/Magazine

Product Name	Q'ty in 1 Box	Details
KDR/KDC	1,500 pcs	45 x 33 Magazine + 15 x 1 Magazine
KMR/KMC	1,000 pcs	35 x 28 Magazine + 20 x 1 Magazine
KWR/KWC	1,500 pcs	45 x 33 Magazine + 15 x 1 Magazine
KDR □ H/KDC □ H	1,500 pcs	45 x 33 Magazine + 15 x 1 Magazine
KWR □ H/KWC □ H	1,000 pcs	35 x 28 Magazine + 20 x 1 Magazine
KMR □ H/KMC □ H	600 pcs	20 x 30 Magazine

* For products other than those listed above or for custom items, please contact us.

OTAX Co., Ltd.
1215, Nippacho, Kohoku-ward,
Yokohama, Kanagawa, 223-8558 Japan

TEL: +81-45-543-5621（Representative）
Mail: sales@otax.co.jp
HP: https://www.otax-en.com/

Code Diagrams

shows the position upon delivery.

■ Binary Coded Decimal Real Code

	Position								
	0	1	2	3	4	5	6	7	8	9
1		●		●		●		●		●
2			●	●			●	●		
4					●	●	●	●		
8									●	●

■ Binary Coded Hexadecmal Real Code

	Position															
	0	1	2	3	4	5	6	7	8	9	A	B	C	D	E	F
1		●		●		●		●		●		●		●		●
2			●	●			●	●			●	●			●	●
4					●	●	●	●					●	●	●	●
8									●	●	●	●	●	●	●	●

■ Binary Coded Decimal Compliment Code

	Position									
	0	1	2	3	4	5	6	7	8	9
1	●		●		●		●		●	
2	●	●			●	●			●	●
4	●	●	●	●					●	●
8	●	●	●	●	●	●	●	●		

■ Binary Coded Hexadecmal Compliment Code

	Position															
	0	1	2	3	4	5	6	7	8	9	A	B	C	D	E	F
1	●		●		●		●		●		●		●		●	
2	●	●			●	●			●	●			●	●		
4	●	●	●	●					●	●	●	●				
8	●	●	●	●	●	●	●	●								

Standard Dimensions

Driver Type/ Vertical

KD □□□□

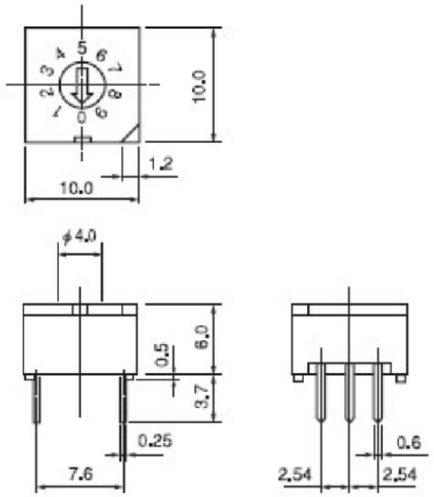

Driver Type/ Horizontal

KD □□□□ H

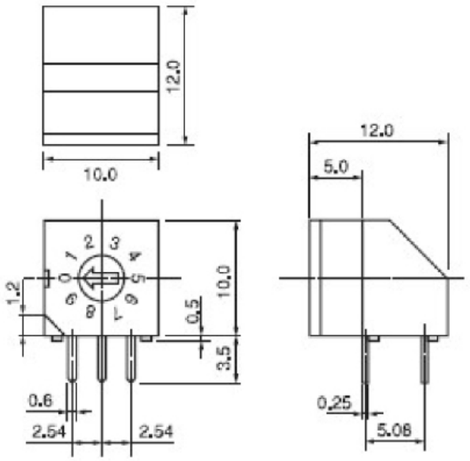

* For products other than those listed above or for custom items, please contact us.

OTAX Co., Ltd.
1215, Nippacho, Kohoku-ward,
Yokohama, Kanagawa, 223-8558 Japan

otax

TEL: +81-45-543-5621（Representative）
Mail: sales@otax.co.jp
HP: https://www.otax-en.com/

DIP Switch | KD/KM/KW Series | DIP Rotary | Through Hole • SMD | 10/16 Position Real/ Compliment

Mini-shaft Type/ Vertical

KM □□□□

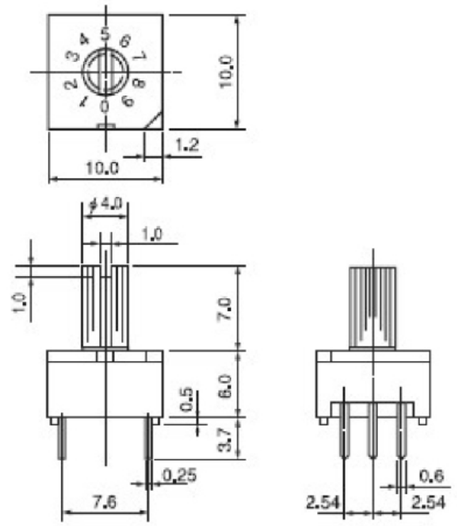

Mini-shaft Type/ Horizontal

KM □□□□ H

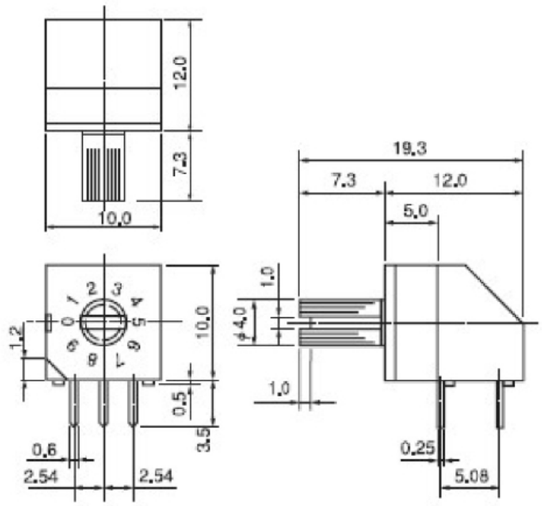

Wheel Type/ Vertical

KW □□□□

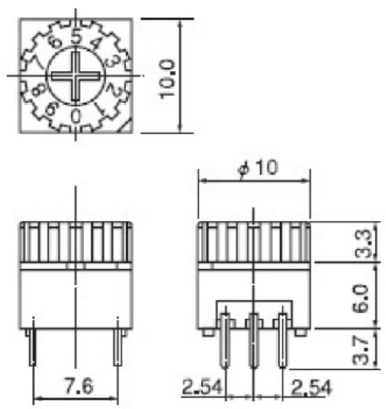

Wheel Type/ Horizontal

KW □□□□ H

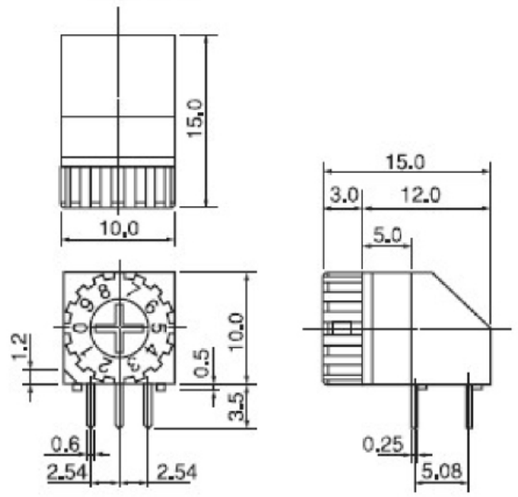

* For products other than those listed above or for custom items, please contact us.

OTAX Co., Ltd.
1215, Nippacho, Kohoku-ward,
Yokohama, Kanagawa, 223-8558 Japan

otax

TEL: +81-45-543-5621（Representative）
Mail: sales@otax.co.jp
HP: https://www.otax-en.com/

Mini-shaft ＋ Indicator/ Vertical

KM □□□□ -3

The Selected Code can be easily seen.

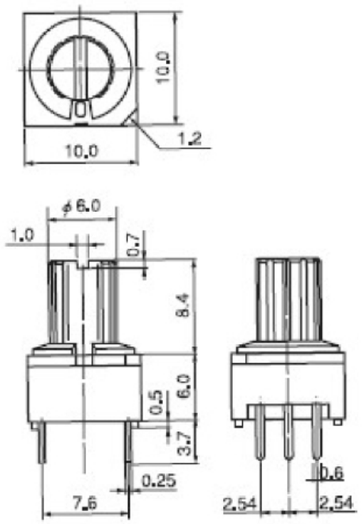

Terminal Diagrams, Mounting Hole Dimensions

Both Real and Compliment have the same allocation. The below charts are seen from the buttom.

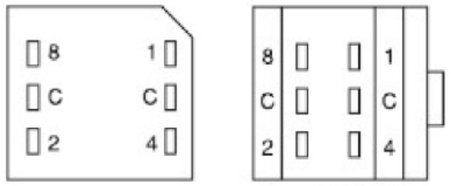

Vertical　　Horizontal

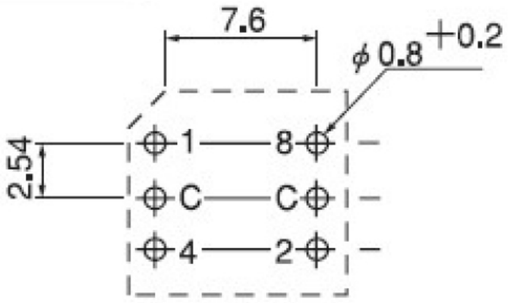

Vertical：As seen from the top

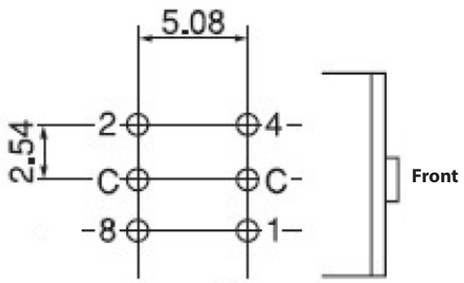

Horizontal：As seen from the top。

* For products other than those listed above or for custom items, please contact us.

OTAX Co., Ltd.
1215, Nippacho, Kohoku-ward,
Yokohama, Kanagawa, 223-8558 Japan
TEL: +81-45-543-5621（Representative）
Mail: sales@otax.co.jp
HP: https://www.otax-en.com/

DIP Switch | KD/KM/KW Series | DIP Rotary | Through Hole・SMD | 10/16 Position Real/ Compliment

Driver Type、SMD（Vertical）

KD □□□□ S

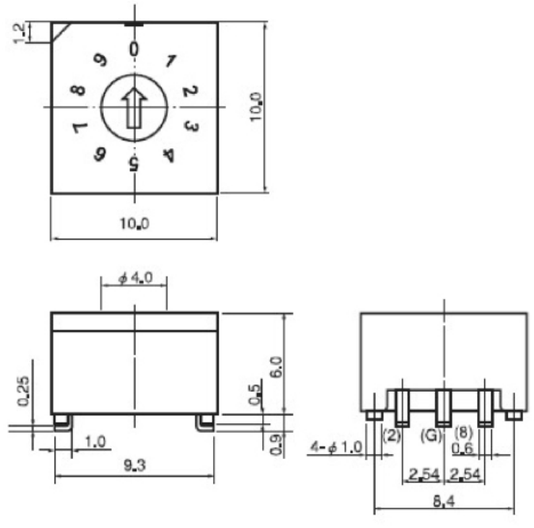

Terminal Diagrams, Mounting Land Dimensions

Both Real and Compliment have the same allocation. The below charts are seen from the buttom.

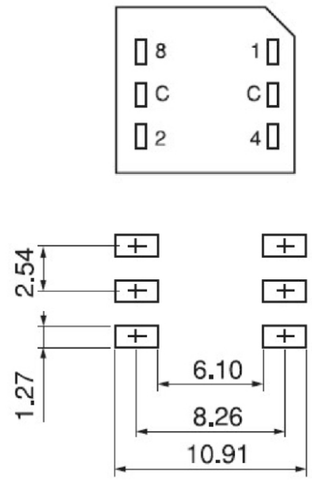

Soldering Conditions

＊ Regarding the Soldering Conditions, please refer to the separate data sheet.（Hand Soldering Condition is A.）

Cautions on Handling Products

1. Alcohol-based, petroleum-based, ketone-based, and chlorine-based cleaning solvents can be used.
2. Reflow soldering conditions may vary depending on the size and assembly density of the printed circuit board in the actual production process. Please refer to the separate datasheet for the recommended temperature profile, and confirm the surface temperature and soldering condition of the mounted component before use.
3. At the time of delivery, the rotor of the real code type is set to position "0" for both 10- and 16-position models. For the complement code type, the initial rotor position is "7" for the 10-position model and "F" for the 16-position model. Please maintain these positions throughout the mounting, soldering, and cleaning processes.

* For products other than those listed above or for custom items, please contact us.

OTAX Co., Ltd.
1215, Nippacho, Kohoku-ward,
Yokohama, Kanagawa, 223-8558 Japan
TEL: +81-45-543-5621（Representative）
Mail: sales@otax.co.jp
HP: https://www.otax-en.com/

DIP Switch | KS/KE Series | DIP Rotary | Through Hole | 10/16 Position Real/ Compliment

Outline of the Series

This is the flagship DIP switch series from OTAX Corporation, a global leader in DIP switch production.

Features of the Series

This compact DIP rotary switch is designed for PCB mounting and features a knife-edge, high-pressure contact mechanism combined with a smooth-turning steel ball detent system, ensuring stable contact and long operational life.
The shaft-sealed (waterproof) type is compatible with flux cleaning processes.

■ Knife-edge High-pressure Contact

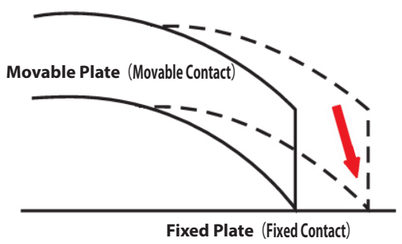

The knife-shaped tip of the movable contact penetrates into the fixed contact, providing a contact structure that is highly resistant to surface contamination and foreign particles.

■ Stable and Sure Contact Mechanism by Steel Balls

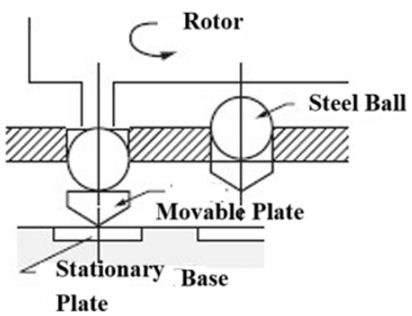

Common Specifications

Ratings	0.4VA DC20V Max.
Contact Resistance	50 mΩ Max. (Initial value)
Withstanding Voltage	AC300V 1 Minute
Insulating Resistance	1,000MΩ Min.
Electrical Life	20,000 steps
Operating Temperature Range	-30℃～ +85℃
Storage Temperature Range	-30℃～ +85℃
Storage Humidity Range	85%RH Max.、no condesation
Operating Force	98mN・m Max.

Specifications of Materials

Part Name	Materials	Finish
Case	PPS	Black
Frame	PPS	Black
Terminals	Copper Alloy	Gold Flash
Movable Plate (Movable Contact)	Copper Alloy	Gold Plating
Fixed Plate (Fixed Contact)	Copper Alloy	Gold Flash
Steel Ball	SUJ2	-
Shaft	Brass	Nickel
O-ring	FPM	
Hand-soldering Conditions	400℃ ±10℃ 4±1 sec.	
Flow Soldering Conditions	Pre-heat：100～105℃ 30±5 sec. Solder Temp.：265±3℃ 8±2 sec.	

Cautions on Handling Products

1. Alcohol-based, petroleum-based, ketone-based, and chlorine-based cleaning solvents can be used.
2. At the time of delivery, the rotor of the real code type is set to position "0" for both 10- and 16-position models. For the complement code type, the initial rotor position is "7" for the 10-position model and "F" for the 16-position model. Please maintain these positions throughout the mounting, soldering, and cleaning processes.
3. This product is RoHS comliant.

* For products other than those listed above or for custom items, please contact us.

OTAX Co., Ltd.
1215, Nippacho, Kohoku-ward,
Yokohama, Kanagawa, 223-8558 Japan
TEL: +81-45-543-5621 (Representative)
Mail: sales@otax.co.jp
HP: https://www.otax-en.com/

DIP Switch | KS/KE Series | DIP Rotary | Through Hole | 10/16 Position Real/ Compliment

Product Designations

Series Name	Shape of Operational-part	Encoding	Number of Steps/ Operational-part			Direction of Operational-part	Supporter
K	S	R	1	0	4		

Shape of Operational-part	Symbol
Shaft	S
Splash-proof shaft	E

Code	Symbol
Real	R
Compliment	C

Poles	Symbol
10-position	104
16-position	164

Direction of Operational-part	Symbol
Vertical	(none)
Horizontal	H

Supporter	Symbol
Not applied	(none)
Applied	S

Contained Q'ty in 1 Box

KSR/KSC/KER/KEC
25 x 40 Case ＝ 1,000 pcs

Code

shows the position upon delivery.

■ Binary Coded Decimal Real Code

	Position									
	0	1	2	3	4	5	6	7	8	9
1		●		●		●		●		●
2			●	●			●	●		
4					●	●	●	●		
8									●	●

■ Binary Coded Hexadecmal Real Code

	Position															
	0	1	2	3	4	5	6	7	8	9	A	B	C	D	E	F
1		●		●		●		●		●		●		●		●
2			●	●			●	●			●	●			●	●
4					●	●	●	●					●	●	●	●
8									●	●	●	●	●	●	●	●

■ Binary Coded Decimal Compliment Code

	Position									
	0	1	2	3	4	5	6	7	8	9
1	●		●		●		●		●	
2	●	●			●	●			●	●
4	●	●	●	●					●	●
8	●	●	●	●	●	●	●	●		

■ Binary Coded Hexadecmal Compliment Code

	Position															
	0	1	2	3	4	5	6	7	8	9	A	B	C	D	E	F
1	●		●		●		●		●		●		●		●	
2	●	●			●	●			●	●			●	●		
4	●	●	●	●					●	●	●	●				
8	●	●	●	●	●	●	●	●								

Mounting Parts

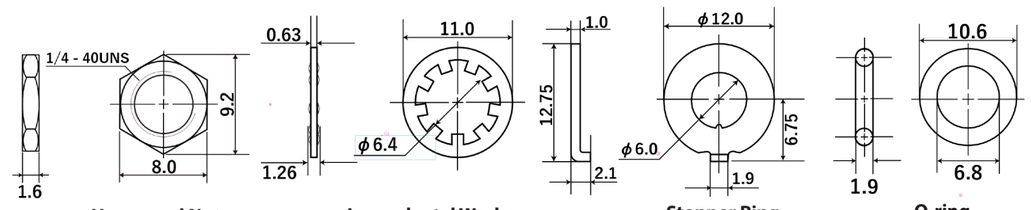

Hexagonal Nut | Inner-dental Washer | Stopper Ring | O-ring (KEType only)

※ For the KSC model, only the lower nut is pre-assembled; the remaining accessories are included separately. For all other models, all accessories are pre-assembled.

* For products other than those listed above or for custom items, please contact us.

OTAX Co., Ltd.
1215, Nippacho, Kohoku-ward,
Yokohama, Kanagawa, 223-8558 Japan
TEL: +81-45-543-5621 (Representative)
Mail: sales@otax.co.jp
HP: https://www.otax-en.com/

Standard Dimensions

Shaft Type/ Vertical

KS □□□□

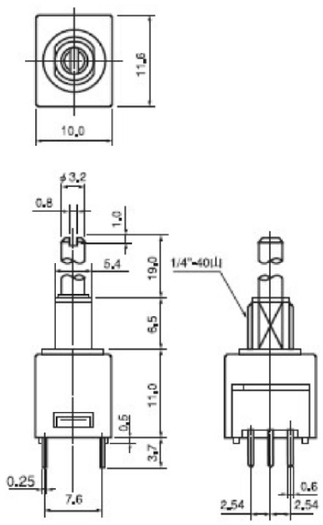

Shaft Type/ With Supporter/ Vertical

KS □□□□ S

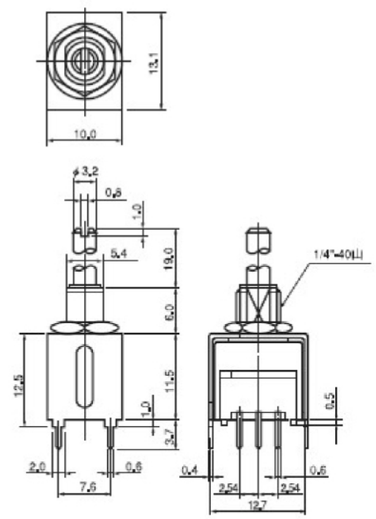

Splash-proof shaftType/ Vertical

KE □□□□

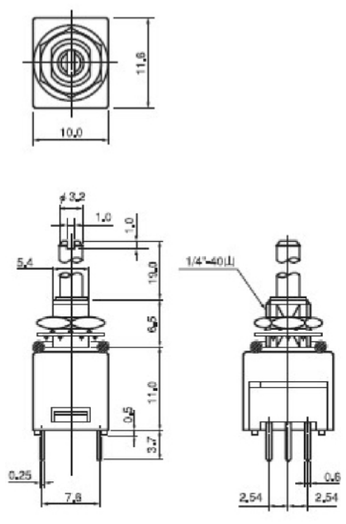

Shaft Type/ With Supporter/ Vertical

KS □□□□ HS

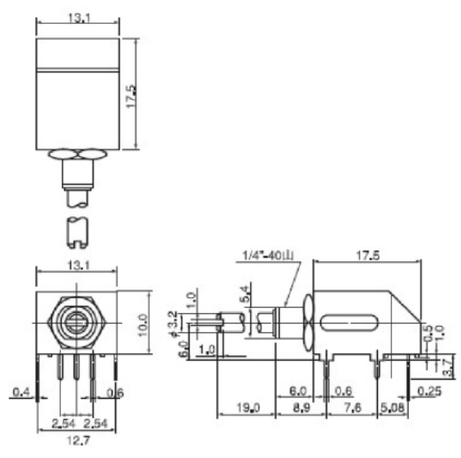

* For products other than those listed above or for custom items, please contact us.

OTAX Co., Ltd.
1215, Nippacho, Kohoku-ward,
Yokohama, Kanagawa, 223-8558 Japan
TEL: +81-45-543-5621（Representative）
Mail: sales@otax.co.jp
HP: https://www.otax-en.com/

DIP Switch | KS/KE Series | DIP Rotary | Through Hole | 10/16 Position Real/ Compliment

PWB Mounting Hole Dimensions, Panel Mounting Hole Dimensions, Dimensions of Supporters

PCB Mounting Hole Dimensions（As seen from Switch Top）

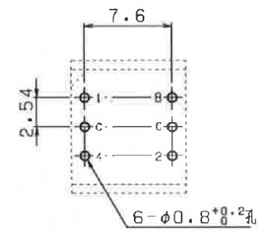

Vertical

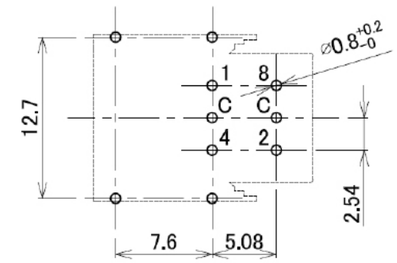

Horizontal

Panel Mounting Hole (without Stopper Ring)

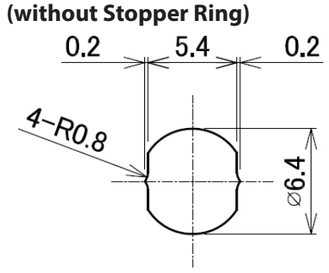

Panel Mounting Hole (with Stopper Ring)

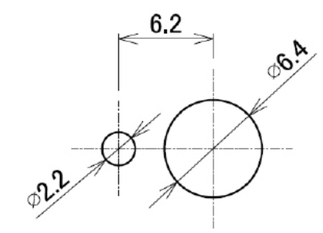

Mounting Hole Dimensions for Vertical Suppoerter（● are for Supporter.）

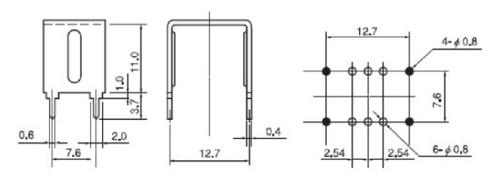

Mounting Hole Dimensions for Horizontal Suppoerter（● are for Supporter.）

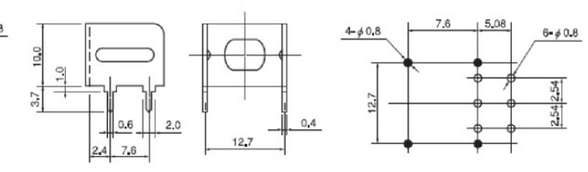

■ Optional Knob

6825-4907
（Black,White Line）
6825-4908
（Silver, Black Line）
Knurled Alminum Finish

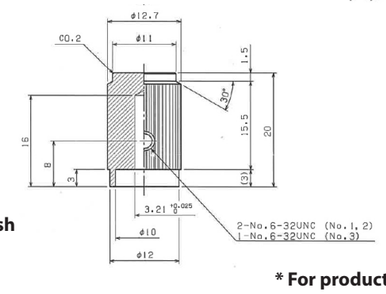

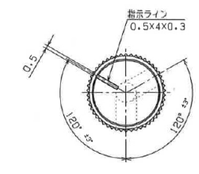

* For products other than those listed above or for custom items, please contact us.

OTAX Co., Ltd.
1215, Nippacho, Kohoku-ward,
Yokohama, Kanagawa, 223-8558 Japan
TEL: +81-45-543-5621（Representative）
Mail: sales@otax.co.jp
HP: https://www.otax-en.com/

DIP Switch | **KZ** Series | DIP Rotary | Through Hole • SMD | 10/16 Position Real/ Compliment

Outline of the Series

Ultra-miniature DIP rotary switches with the minimum size of 7.2 □ x 3 mm.

Features of the Series

This DIP rotary switch has been ultra-miniaturized to the extreme, with a body size of 7.2–7.5 mm square and a height of 3.0–3.2 mm.
Two actuator types are available: screwdriver type and mini-shaft type.
Terminal pitch options include both 2.54 mm and 1.27 mm, with through-hole PCB terminals as well as J-lead and gull-wing terminals for surface mounting, meeting a wide range of application needs.
A metal spring is used in the rotor section to provide a crisp tactile feel, while the contact area is gold-plated and features a structure that disperses rebound forces during switching, ensuring high contact stability.

Common Specifications

Ratings	0.4VA DC20V Max.
Contact Resistance	100 mΩ Max. (Initial value)
Withstanding Voltage	AC250V 1 Minute
Insulating Resistance	1,000MΩ Min.
Electrical Life	10,000 steps
Operating Temperature Range	-40℃～ +85℃
Storage Temperature Range	-30℃～ +70℃
Storage Humidity Range	30 -70%RH no condesation
Operating Force	19.6mN·m Max.
Number of Re-flow	2 times Max.

Specifications of Materials

Part Name	Materials	Finish
Case	PPS	Black
Frame	PPS	Gray/ Black
Rotor（Driver Type）	LCP	White
Mini-shaft	LCP	White
Plate	SUS	—
Movable Plate（Movable Contact）	Copper Alloy	Gold Plating
Fixed Plate（Fixed Contact）	Copper Alloy	Gold Flash
Holder	SUS	Gold Flash

* For products other than those listed above or for custom items, please contact us.

OTAX Co., Ltd.
1215, Nippacho, Kohoku-ward,
Yokohama, Kanagawa, 223-8558 Japan
otax
TEL: +81-45-543-5621（Representative）
Mail: sales@otax.co.jp
HP: https://www.otax-en.com/

DIP Switch | **KZ** Series | DIP Rotary | Through Hole • SMD | 10/16 Position Real/ Compliment

Product Designations

Series Name		Pitch/ Color/ Legends	Shape of Operational-part	Encoding	Position		Direction of Operational-part	Type of Terminals	Package
K	Z	0	D	R	1	0	V	T	M

Pitch/ Color/ Legends	Symbol
2.54mm, Gray, Laser	0
2.54mm, Black, White Stamp	1
1.27mm, Silver, Laser	4

Code	Symbol
Real	R
Compliment	C

Poles	Symbol
10-position	10
16-position	16

Type of Terminals	Symbol
Through Hole Mounting	T
SMD（Gull-wing）	S
SMD（J-lead）	L

Shape of Operational-part	Symbol
Driver	D
Mini-shaft	M

Direction of Operational-part	Symbol
Vertical	V
Horizontal	H

Package	Symbol
Magazine	M
Tape-reel	E

* As for "Direction of Operational-part", 0,1 codes of "Pitch/ Color/ Legends" are V only, and 4 is H only.E of "Package" is available only for SMDs.

Q'ty in 1 Magazine, Box, and Reel

Product Name	Mounting	Package	Total Quantity
KZ □□□□□□TM	Through Hole	Magazine	60 pcs/Magazine X 60 = 3,600 pcs/ Box
KZ4 □□□□□SM	SMD	Magazine	45 pcs/Magazine X 60 = 2,700 pcs/Box
KZ1 □□□□□SE	SMD	Tape-reel	1,000 pcs / reel
KZ4 □□□□□SE	SMD	Tape-reel	500 pcs / reel

Code

shows the position upon delivery.

■ Binary Coded Decimal Real Code

	Position								
	0	1	2	3	4	5	6	7	8	9
1		●		●		●		●		●
2			●	●			●	●		
4					●	●	●	●		
8									●	●

■ Binary Coded Hexadecmal Real Code

	Position															
	0	1	2	3	4	5	6	7	8	9	A	B	C	D	E	F
1		●		●		●		●		●		●		●		●
2			●	●			●	●			●	●			●	●
4					●	●	●	●					●	●	●	●
8									●	●	●	●	●	●	●	●

■ Binary Coded Decimal Compliment Code

	Position									
	0	1	2	3	4	5	6	7	8	9
1	●		●		●		●		●	
2	●	●			●	●			●	●
4	●	●	●	●					●	●
8	●	●	●	●	●	●	●	●		

■ Binary Coded Hexadecmal Compliment Code

	Position															
	0	1	2	3	4	5	6	7	8	9	A	B	C	D	E	F
1	●		●		●		●		●		●		●		●	
2	●	●			●	●			●	●			●	●		
4	●	●	●	●					●	●	●	●				
8	●	●	●	●	●	●	●	●								

* For products other than those listed above or for custom items, please contact us.

OTAX Co., Ltd.
1215, Nippacho, Kohoku-ward,
Yokohama, Kanagawa, 223-8558 Japan
otax
TEL: +81-45-543-5621（Representative）
Mail: sales@otax.co.jp
HP: https://www.otax-en.com/

DIP Switch | KZ Series | DIP Rotary | Through Hole • SMD | 10/16 Position Real/ Compliment

Standard Dimensions/ Mounting Holes Dimensions/ Land Dimensions

Driver Type/Through Hole/ Vertical

KZ □ D □□□ VTM

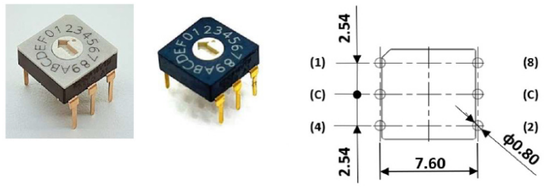

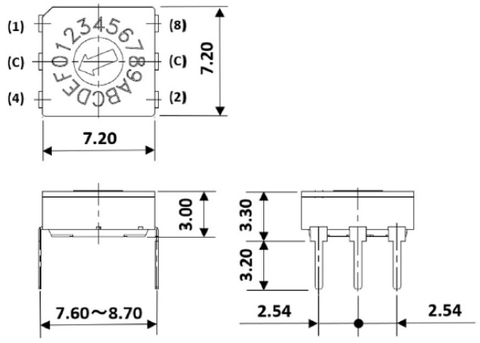

Driver Type/SMD (Gull-wing) / Vertical

KZ □ D □□□ VS □

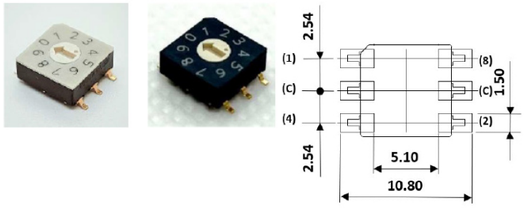

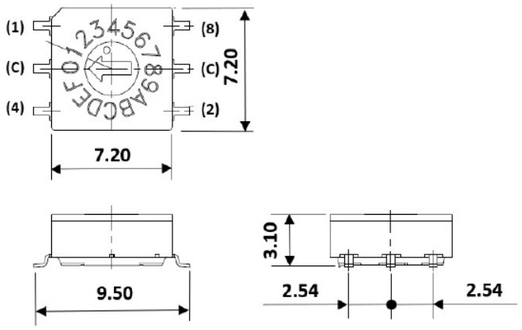

Driver Type/SMD (J-lead) / Vertical

KZ □ D □□□ VL □

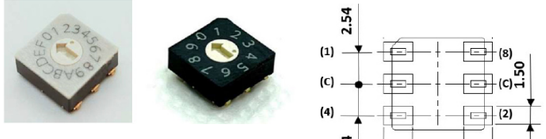

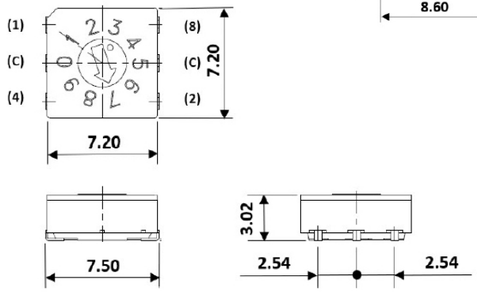

* For products other than those listed above or for custom items, please contact us.

OTAX Co., Ltd.
1215, Nippacho, Kohoku-ward,
Yokohama, Kanagawa, 223-8558 Japan
TEL: +81-45-543-5621 (Representative)
Mail: sales@otax.co.jp
HP: https://www.otax-en.com/

DIP Switch | KZ Series | DIP Rotary | Through Hole • SMD | 10/16 Position Real/ Compliment

Mini-shaft Type/Through Hole/ Vertical

KZ □ M □□□ VTM

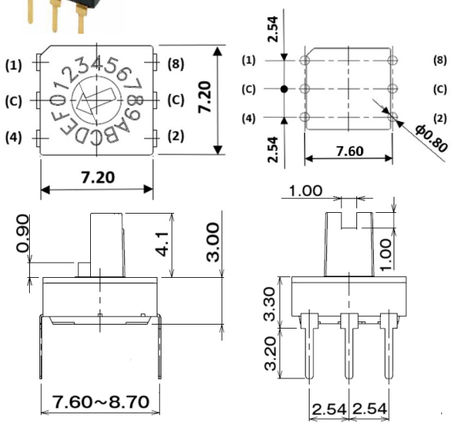

Mini-shaft Type/SMD (Gull-wing) / Vertical

KZ □ M □□□ VS □

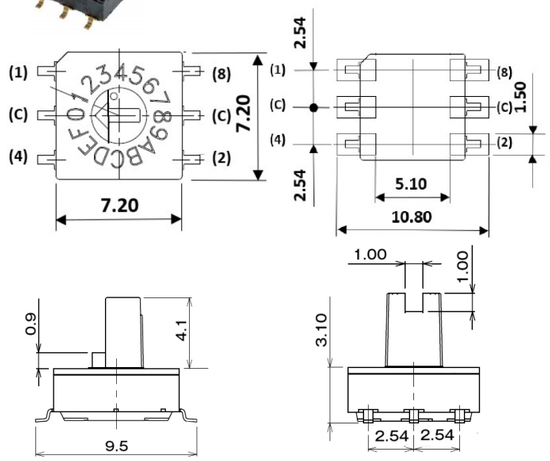

Driver Type/Through Hole/ Horizontal

KZ4D □□□ HTM

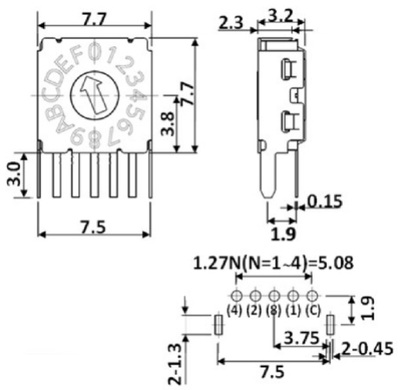

Driver Type/SMD (Gull-wing) / Horizontal

KZ4D □□□ HS □

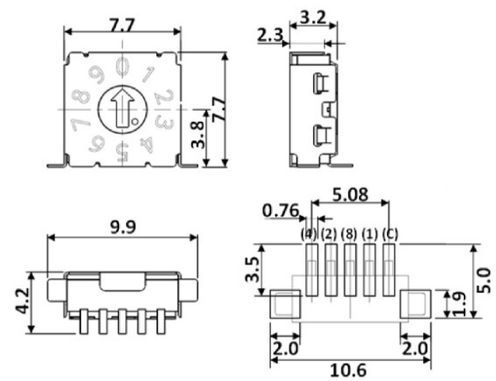

* For products other than those listed above or for custom items, please contact us.

OTAX Co., Ltd.
1215, Nippacho, Kohoku-ward,
Yokohama, Kanagawa, 223-8558 Japan
TEL: +81-45-543-5621 (Representative)
Mail: sales@otax.co.jp
HP: https://www.otax-en.com/

Soldering Conditions

＊ **Regarding the Soldering Conditions, please refer to the separate data sheet.（Hand Soldering Condition is B.)**

Cautions on Handling Products

1. **The conditions for reflow soldering may vary depending on the dimensions of the printed circuit board and the assembly density in the actual production process. Please refer to the temperature profile in the separate datasheet in advance, and confirm the surface temperature and soldering condition of the mounted product before use.**
2. **At the time of delivery, the rotor of the real code type is set to position "0" for both 10- and 16-position models. For the complement code type, the initial rotor position is "7" for the 10-position model and "F" for the 16-position model. Please maintain these positions throughout the mounting, soldering, and cleaning processes.**

Compliance with the European RoHS Directive

All DIP switches, control switches, connectors, and terminal blocks manufactured by OTAX with the following RoHS Directive: Directive 2011/65/EU of the European Parliament and of the Council on the restriction of the use of certain hazardous substances in electrical and electronic equipment (RoHS).

Our products do not contain any of the ten specified hazardous substances (except for exempted applications):

Lead (Pb) Mercury (Hg) Cadmium (Cd) Hexavalent chromium (Cr^{6+}) Polybrominated biphenyls (PBB) Polybrominated diphenyl ethers (PBDE) Di(2-ethylhexyl) phthalate (DEHP) Butyl benzyl phthalate (BBP) Dibutyl phthalate (DBP) Diisobutyl phthalate (DIBP)

*** For products other than those listed above or for custom items, please contact us.**

OTAX Co., Ltd.
1215, Nippacho, Kohoku-ward,
Yokohama, Kanagawa, 223-8558 Japan

TEL: +81-45-543-5621（Representative）
Mail: sales@otax.co.jp
HP: https://www.otax-en.com/

DIP Switch | KZ Series | DIP Rotary | Through Hole・SMD | 10/16 Position Real/ Compliment

Tips for Switches

Pull-up and Pull-down of a microprocessor

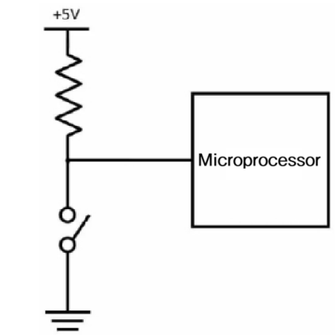

Pull-up Circuit

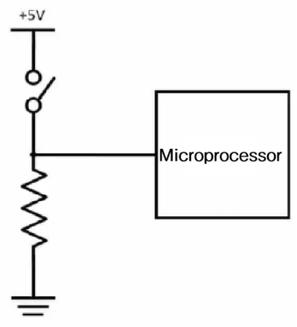

Pull-down Circuit

As a fundamental concept of microprocessors, one of the common stumbling blocks when first creating circuits using a microprocessor is understanding pull-up and pull-down resistors. As you may know, microprocessors operate using digital control with two values: High (1) and Low (0). Typically, the High level is connected to a power supply voltage known as Vdd (e.g., 5V, 3.3V, 1.7V, etc.). On the other hand, assuming that an unconnected pin will naturally be Low (0) is, in a sense, incorrect. This is because when a microprocessor's pin is left unconnected, it is said to be "floating" or in a "Hi-Z (high impedance)" state, which is electrically unstable and prone to noise and interference.

Therefore, it is standard practice to connect each pin to either the power supply (Vdd) or ground (Vss) through a resistor. When connected to Vdd, this is called a "pull-up" (which sets the default state to High), and when connected to Vss, it is called a "pull-down" (which sets the default state to Low). This approach electrically forces each pin into either the High or Low state.

Incidentally, in the case of a pull-up configuration, if a DIP switch is connected, turning the switch ON connects the line to ground, resulting in a digital Low (0). When the switch is OFF, the line remains pulled up to High (1).

*** For products other than those listed above or for custom items, please contact us.**

OTAX Co., Ltd.
1215, Nippacho, Kohoku-ward,
Yokohama, Kanagawa, 223-8558 Japan

TEL: +81-45-543-5621（Representative）
Mail: sales@otax.co.jp
HP: https://www.otax-en.com/

SIP スイッチ | **SX** シリーズ | SIP スイッチ | スルーホール | 2、4、6、8、10 極

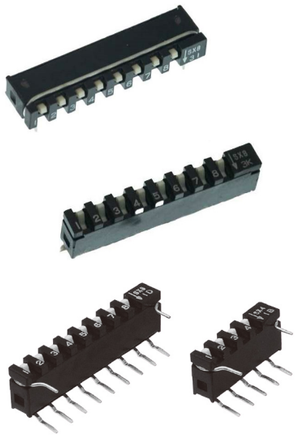

シリーズの概要

実装幅を従来の 1/2（当社 DIP 製品比）の超薄型に まとめた SIP スイッチです。

シリーズの特長

1. ナイフエッジ・ハイプレッシャー接触方式により微小電流での安定した接触を実現しています。
2. 動作構造部にクリック機構を設け、軽快な操作感（クリック感）を実現させました。
3. 丸洗い洗浄が可能です。

■ ナイフエッジ・ハイプレッシャー構造接点

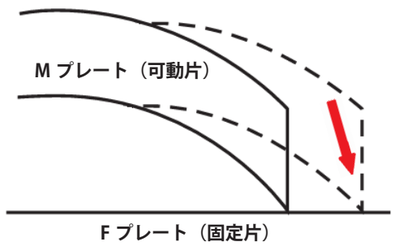

可動片のナイフ状の先端部が固定片に食い込むように接触するため、接点表面の汚れ・異物等の影響を受けにくくなっています。

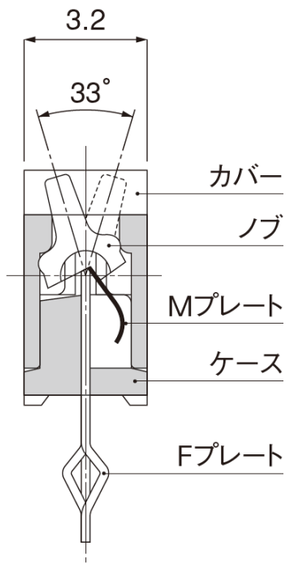

共通仕様

定格	DC5V　10mA
接触抵抗	300 m Ω 以下（初期値）
絶縁耐圧	AC300V　1 分間
絶縁抵抗	100M Ω以上
電気的寿命	1,000 回
使用温度範囲	-30℃～ +60℃
保存温度範囲	-30℃～ +80℃
動作力	5.9N 以下

材料仕様

部品名	材質	仕上げ
ノブ	耐熱性ポリアミド	白色
カバー	PBT	黒色
ケース	PPS	黒色
M プレート（可動接点）	銅合金	金フラッシュ
F プレート（固定接点）	銅合金	金フラッシュ
ターミナル	銅合金	金フラッシュ
手はんだ付け条件	こて先温度 320℃以下　4 ± 1 秒	
フローはんだ付け条件	プレヒート 100～105℃ 30±5秒 はんだ温度 265±3℃ 8±2秒	

※上記商品以外・カスタム品についてはお問い合わせください。

オータックス株式会社
〒 223-8558 神奈川県横浜市
港北区新羽町 1215 番地
otax
TEL: 045-543-5621（代表）
Mail: sales@otax.co.jp
HP: https://www.otax.co.jp/

SIP スイッチ | **SX** シリーズ | SIP スイッチ | スルーホール | 2、4、6、8、10 極

品名構成

シリーズ名		端子形状	極数	
S	X	V	8	2

端子形状	記号
バーティカル	V
ホリゾンタル	H

極数	記号
2	22
4	42
6	62
8	82
10	102

※端子形状記号と極数の末尾 1 桁は製品には表示していません。

標準寸法

バーティカルタイプ　SXV □□

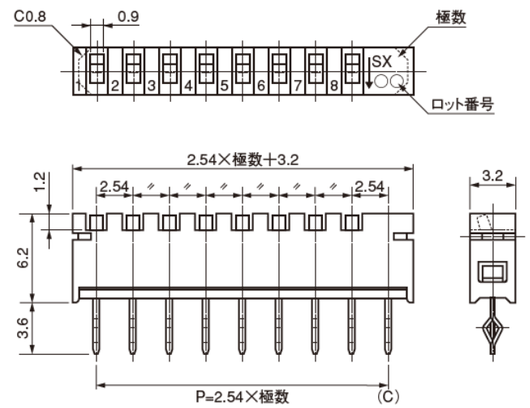

ホリゾンタルタイプ　SXH □□

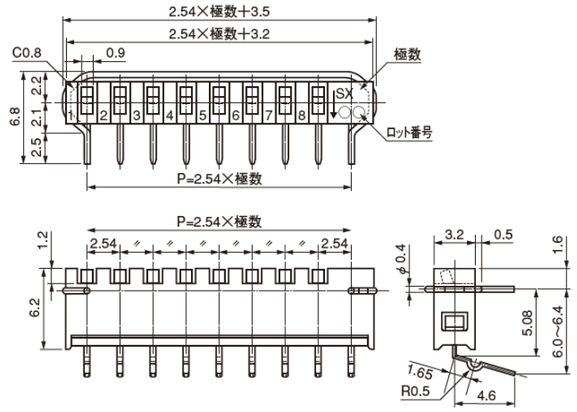

取付穴寸法

バーティカルタイプ

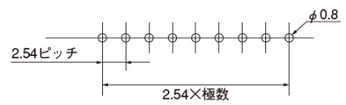

ホリゾンタルタイプ

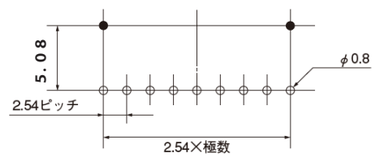

（注）●はサポーターマウント用　（極数プラス 1 孔）

単位 mm

回路図

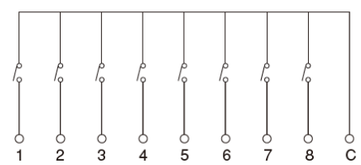

（極数プラス COM ターミナル）

※上記商品以外・カスタム品についてはお問い合わせください。

オータックス株式会社
〒 223-8558 神奈川県横浜市
港北区新羽町 1215 番地
otax
TEL: 045-543-5621（代表）
Mail: sales@otax.co.jp
HP: https://www.otax.co.jp/

PWB 端子

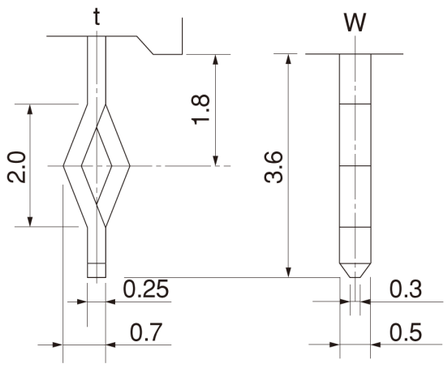

梱包箱・マガジン梱包数量

極数	1 マガジン当たりの入り数（個）	SXV		SXH	
		1 箱当たりのマガジン数（本）	1 箱当たりの総入数（個）	1 箱当たりのマガジン数（本）	1 箱当たりの総入数（個）
2	50	100	5,000	70	3,500
4	30	100	3,000	70	2,100
6	25	100	2,500	70	1,750
8	20	100	2,000	70	1,400
10	15	100	1,500	70	1,050

製品取扱上の注意

1. 洗浄液は、アルコール類、石油系、ケトン系、塩素系溶剤が使用できます。
2. 納入時、ノブの位置は OFF になっています。実装→半田付→洗浄迄はこの状態を維持して下さい。
3. 本シリーズは RoHS 規制対応品です。

※上記商品以外・カスタム品についてはお問い合わせください。

オータックス株式会社
〒 223-8558 神奈川県横浜市
港北区新羽町 1215 番地
TEL: 045-543-5621（代表）
Mail: sales@otax.co.jp
HP: https://www.otax.co.jp/

SIP スイッチ | SX シリーズ | SIP スイッチ | スルーホール | 2、4、6、8、10 極

スイッチワンポイントアドバイス

マイクロプロセッサーのプルアップとプルダウン

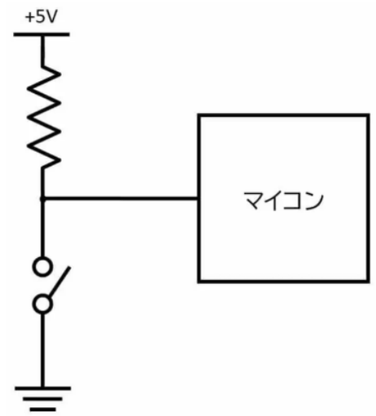

プルアップ回路

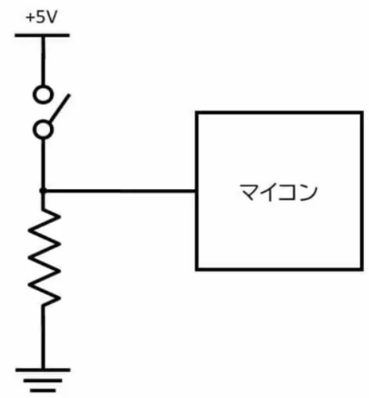

プルダウン回路

マイクロプロセッサーの基礎として、最初にマイクロプロセッサーを使った回路を作る時に、つまづきやすいのがプルアップ抵抗、プルダウン抵抗です。マイクロプロセッサーの制御はご承知の通り、H（1）と L（0）の 2 つの値を使ったデジタル制御です。通常 H の方は Vdd と呼ばれる電源電圧（5V、3.3V、1.7V など）につなぎます。これに対し、L の方は何もつながなければ 0 であろうと解釈するのはある意味間違いです。何故なら、マイクロプロセッサーの端子に何もつないでいない状態はフローティング（浮いている）とか Hi-Z（ハイインピーダンス）と呼ばれ、電気的には不安定でノイズなどの影響を受けやすくなるからです。
なので、使用する端子には、抵抗を介して電源（Vdd）またはグラウンド（Vss) にそれぞれつなぎます。Vdd につなぐ場合をプルアップ（通常状態を H に設定）、Vss につなぐ場合をプルダウン（通常状態を L に設定）と言います。これによって各端子の H と L を電気的に強制的に設定する訳です。
ちなみにプルアップの場合、ここに DIP スイッチを接続した場合、スイッチを ON にするとグラウンドに接続されるので、デジタル回路的には L（0）になります。OFF にすると H（1）になります。プルダウンでは逆になります。

※上記商品以外・カスタム品についてはお問い合わせください。

オータックス株式会社
〒 223-8558 神奈川県横浜市
港北区新羽町 1215 番地
TEL: 045-543-5621（代表）
Mail: sales@otax.co.jp
HP: https://www.otax.co.jp/

Hand-soldering Conditons

Type of Conditions	Soldering Bar Tip Temperature	Time
A	400 ± 10℃	Max. 4 sec.
B	Max. 350℃	Max. 3 sec.

Flow-soldering Conditions

Type of Conditions	Pre-heat Temp.	Pre-heat time	Soldering Temp.	Dipping Time
A	Max. 110℃	Within 60 sec.	260 ± 5℃	Within 5 sec.

Reflow -soldering Conditions

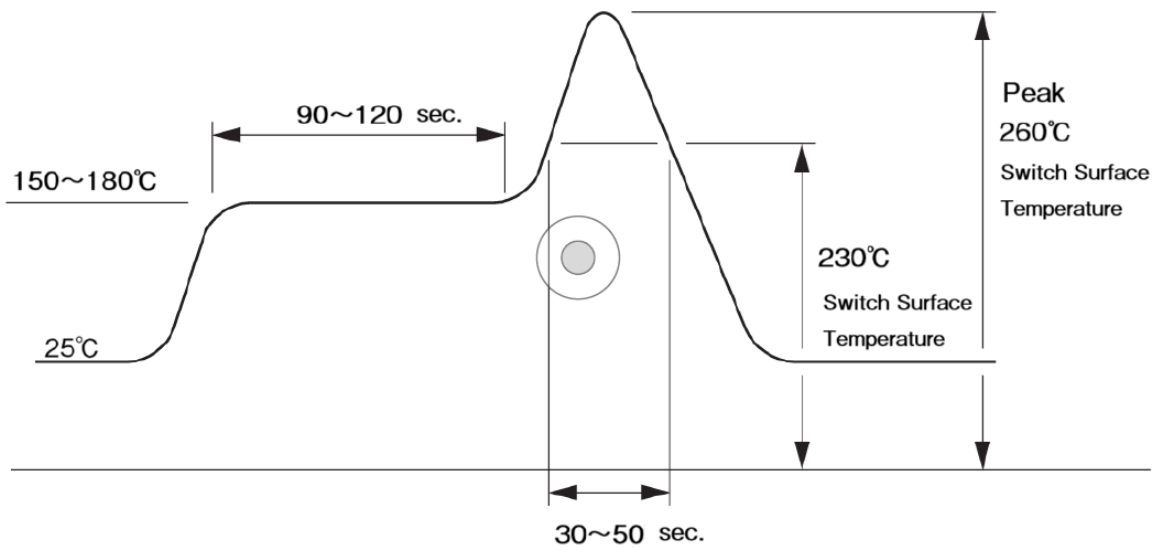

Note:

The above profile is based on conditions for a hot-air reflow oven.

For far-infrared or vapor phase soldering (VPS) ovens, please adjust the conditions as necessary.

Toggle

A Series

250V/125VAC
25A
20A
15A

Solder Lug
Screw
Quick Connect

SP 2P
3P 4P

Outline of the Series

OTAX offers a wide range of long-selling, high-rated, and highly reliable operational switches, including toggle, waterproof toggle, rocker, push-button, and rotary switches.

Features of the Series

1. All standard models use UL94 V-0 flame-retardant resin for the case.
2. Contact bounce during switching is minimized, ensuring stable operation across a wide current range—from low to high currents.
3. All models feature insert molding to eliminate gaps between metal and resin parts, preventing flux from entering the case.
4. A safety-oriented design ensures that even if the case is deformed by heat, insulation failure will not occur.
5. The switches are designed to meet various standards, offering excellent durability, environmental resistance, impact resistance, and vibration resistance.

A The frame adopts a short clinch structure, completely isolating it from conductive components and providing extremely high insulation performance.
B UL94 V-0 certified flame-retardant resin is used, offering outstanding resistance to arcing, heat, cold, moisture, and impact.
C A fixed contact embedding method is used to completely prevent flux from entering the case.

With this structure, electrical performance is not compromised by heat-induced terminal loosening or case deformation.

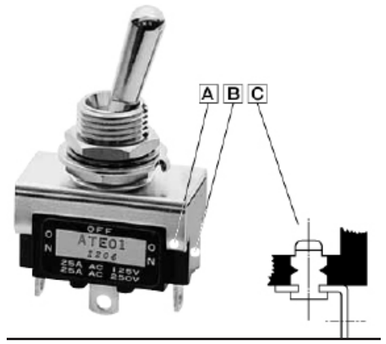

Common Specifications

Ratings □ =Type of Terminals Symbol（1, 2, 4, 5）

Voltage / Symbol	0 □	1 □	2 □	Load	Notes
AC125/250V	25A	20A	15A	Resistive Load	Load only with Resistive, Power Factor=1
DC30V	25A	20A	15A		

* A resistive load refers to a load consisting solely of resistance. In actual circuits, however, there may be inductive, capacitive, or motor loads, each of which can generate inrush current. Therefore, when selecting a switch, be sure to choose a rating with sufficient margin above the steady-state current.
For more details, please refer to "Useful Advices and Precautions on Usage of Operational Switches."

Packaging Quantity	
SP・DP	100 pcs
3P・4P	50 pcs

Contact Resistance	10 mΩ Max. (DC2V 1A) (Initial value)
Withstanding Voltage	AC1,500V 1 Minute
Insulating Resistance	1,000MΩMin. (DC500V)
Electrical Life	20,000 times
Operating Temperature Range	-20℃～ +70℃
Storage Temperature Range	-20℃～ +70℃
Hand-soldering Conditions	350 ± 3℃ within 3 sec.

* For products other than those listed above or for custom items, please contact us.

Product Designations

Series Name	Poles	Operational-part Type	Switch Functions	Current Capacity	Type of Terminals	Splash-proof Type
A		T	A	2	1	

Poles	Symbol
1	(none)
2	(none)
3	3
4	4

Operational-part	Symbol
Toggle	T

Current Capacity	Symbol
25A 125/250V AC	0
20A 125/250V AC	1
15A 125/250V AC	2

Splash-proof Type	Symbol
Non Splash-proof Type	(none)
Splash-proof	W

Switch Functions			Symbol	
The Opposite Side	Center	Key Thread Side	SP 3P	DP 4P
ON	-	OFF	A	K
ON	-	ON	D	N
ON	OFF	ON	E	P
ON	-	<ON>	F	R
<ON>	OFF	<ON>	G	S
ON	OFF	<ON>	H	T
ON	ON	ON		PA
ON	ON	<ON>		TA

< > = Momentary Function
■ The PA and TA types are made-to-order products. Please contact us separately for specifications and other details. Waterproof versions are not available for these types.

Type of Terminals	Symbol
Solder Lug	1
Screw Terminal	2
Quick Connect Terminal #187	4
Quick Connect Terminal #250	5

Screw Terminal and Quick Connect Terminal # 187 are with 15A, Quick Connect Terminal # 250 with 20,25A only.

■ Examples of Terminal Figures（SP・DP, ON-ON Type）

Solder Lug | Screw | Quick Connect #187 | Quick Connect #250

SP

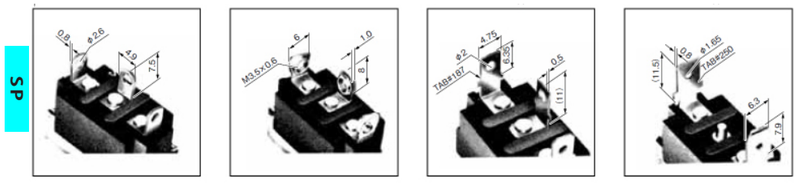

Solder Lug | Screw | Quick Connect #187 | Quick Connect #250

DP

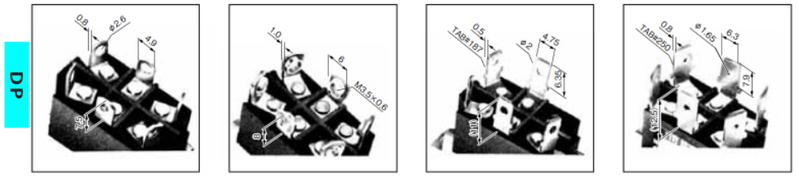

Silhouette（ATA21）

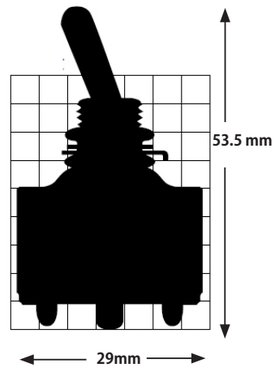

* For products other than those listed above or for custom items, please contact us.

Toggle
A Series
250V/125VAC
25A
20A
15A
Solder Lug
Screw
Quick Connect
SP 2P
3P 4P

Toggle

A Series

250V/125VAC
25A
20A
15A

Solder Lug
Screw
Quick Connect

SP 2P
3P 4P

Switch Names, Functions, Terminal Diagram

S P

Product Name	Resistive Load AC125/250V DC30V	Product Name	Resistive Load AC125/250V DC30V	Product Name	Resistive Load AC125/250V DC30V	Circuit	Functions <> = Momentary		
ATA01	25A	ATA11	20A	ATA21	15A	SPST	ON 1-3	—	OFF
ATD01	25A	ATD11	20A	ATD21	15A	SPDT	ON 2-3	—	ON 2-1
ATE01	25A	ATE11	20A	ATE21	15A	SPDT	ON 2-3	OFF	ON 2-1
ATF01	25A	ATF11	20A	ATF21	15A	SPDT	ON 2-3	—	<ON> 2-1
ATG01	25A	ATG11	20A	ATG21	15A	SPDT	<ON> 2-3	OFF	<ON> 2-1
ATH01	25A	ATH11	20A	ATH21	15A	SPDT	ON 2-3	OFF	<ON> 2-1

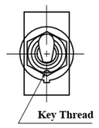

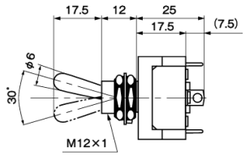

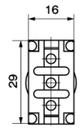

■ Terminal Diagram

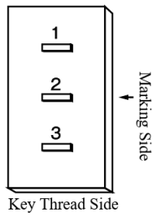

D P

Product Name	Resistive Load AC125/250V DC30V	Product Name	Resistive Load AC125/250V DC30V	Product Name	Resistive Load AC125/250V DC30V	Circuit	Functions <> = Momentary		
ATK01	25A	ATK11	20A	ATK21	15A	2 PolesST	ON 1-3 4-6	—	OFF
ATN01	25A	ATN11	20A	ATN21	15A	2 PolesDT	ON 2-3 5-6	—	ON 2-1 5-4
ATP01	25A	ATP11	20A	ATP21	15A	2 PolesDT	ON 2-3 5-6	OFF	ON 2-1 5-4
ATR01	25A	ATR11	20A	ATR21	15A	2 PolesDT	ON 2-3 5-6	—	<ON> 2-1 5-4
ATS01	25A	ATS11	20A	ATS21	15A	2 PolesDT	<ON> 2-3 5-6	OFF	<ON> 2-1 5-4
ATT01	25A	ATT11	20A	ATT21	15A	2 PolesDT	ON 2-3 5-6	OFF	<ON> 2-1 5-4

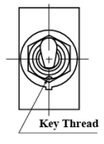

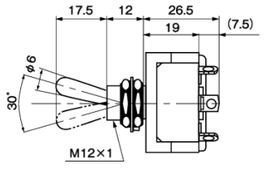

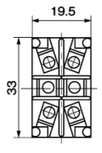

■ Terminal Diagram

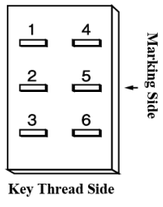

* For products other than those listed above or for custom items, please contact us.

Toggle

A Series

250V/125VAC
25A
20A
15A

Solder Lug
Screw
Quick Connect

SP 2P
3P 4P

3 P

Product Name	Resistive Load AC125/250V DC30V	Product Name	Resistive Load AC125/250V DC30V	Product Name	Resistive Load AC125/250V DC30V	Circuit	Functions <> = Momentary		
A3TA01	25A	A3TA11	20A	A3TA21	15A	3 PolesST	ON 1-3 4-6 7-9	—	OFF
A3TD01	25A	A3TD11	20A	A3TD21	15A	3 PolesDT	ON 2-3 5-6 8-9	—	ON 2-1 5-4 8-7
A3TE01	25A	A3TE11	20A	A3TE21	15A	3 PolesDT	ON 2-3 5-6 8-9	OFF	ON 2-1 5-4 8-7
A3TF01	25A	A3TF11	20A	A3TF21	15A	3 PolesDT	ON 2-3 5-6 8-9	—	<ON> 2-1 5-4 8-7
A3TG01	25A	A3TG11	20A	A3TG21	15A	3 PolesDT	<ON> 2-3 5-6 8-9	OFF	<ON> 2-1 5-4 8-7
A3TH01	25A	A3TH11	20A	A3TH21	15A	3 PolesDT	ON 2-3 5-6 8-9	OFF	<ON> 2-1 5-4 8-7

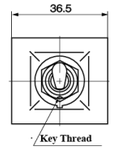

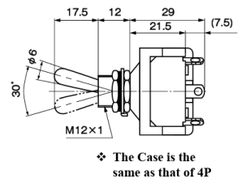

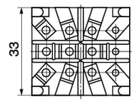

■ Terminal Diagram

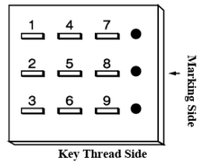

4 P

Product Name	Resistive Load AC125/250V DC30V	Product Name	Resistive Load AC125/250V DC30V	Product Name	Resistive Load AC125/250V DC30V	Circuit	Functions <> = Momentary		
A4TK01	25A	A4TK11	20A	A4TK21	15A	4 PolesST	ON 1-3 4-6 7-9 10-12	—	OFF
A4TN01	25A	A4TN11	20A	A4TN21	15A	4 PolesDT	ON 2-3 5-6 8-9 11-12	—	ON 2-1 5-4 8-7 11-10
A4TP01	25A	A4TP11	20A	A4TP21	15A	4 PolesDT	ON 2-3 5-6 8-9 11-12	OFF	ON 2-1 5-4 8-7 11-10
A4TR01	25A	A4TR11	20A	A4TR21	15A	4 PolesDT	ON 2-3 5-6 8-9 11-12	—	<ON> 2-1 5-4 8-7 11-10
A4TS01	25A	A4TS11	20A	A4TS21	15A	4 PolesDT	<ON> 2-3 5-6 8-9 11-12	OFF	<ON> 2-1 5-4 8-7 11-10
A4TT01	25A	A4TT11	20A	A4TT21	15A	4 PolesDT	ON 2-3 5-6 8-9 11-12	OFF	<ON> 2-1 5-4 8-7 11-10

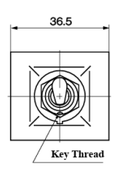

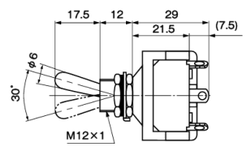

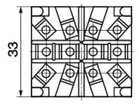

■ Terminal Diagram

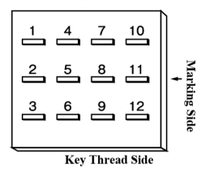

* For products other than those listed above or for custom items, please contact us.

Panel-mounting Splash-proof Toggle

A□T□□□W

A dual waterproof structure consisting of an O-ring and silicone potting around the internal area of the actuator prevents water from entering the switch interior.

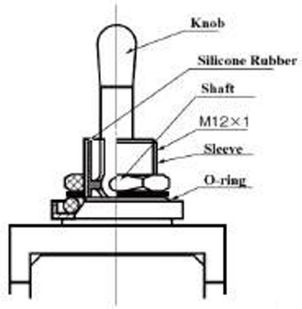

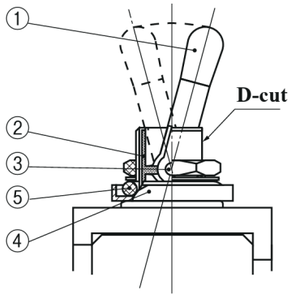

Symbol	Part Name	Materials
①	Knob	Brass Bar
②	Splash-proof Rubber	Silicone Rubber (white)
③	Shaft	SUS
④	Bushing	Brass Bar
⑤	O-ring	NBR

S P

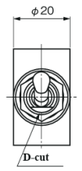

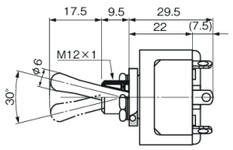

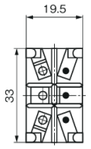

❖ The Case is the same as that of DP

Terminal Diagram

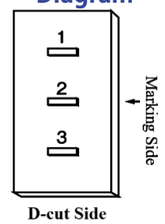

2 P

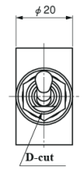

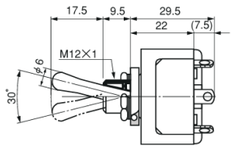

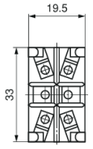

Terminal Diagram

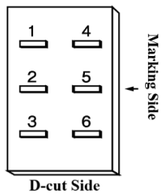

3 P

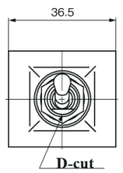

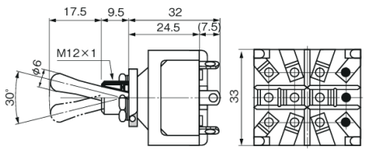

❖The Case is the same as that of 4P

Terminal Diagram

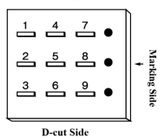

4 P

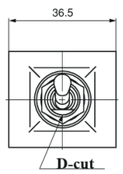

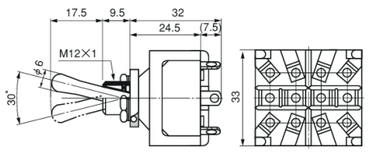

Terminal Diagram

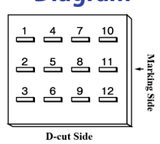

* For products other than those listed above or for custom items, please contact us.

Dimensions of Terminals, Mounting Holes, and Mounting Parts

Dimensions of Terminals A□T□□■□

1 Solder Lug	2 Screw Terminal	4 Quick Connect #187	5 Quick Connect #250

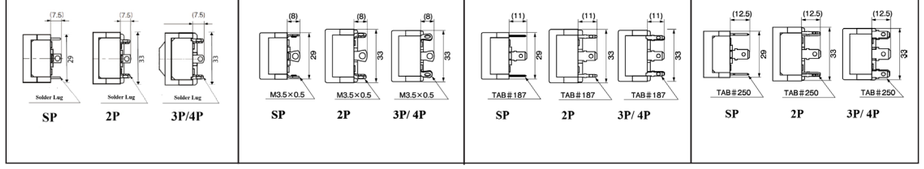

Mounting Hole Dimensions

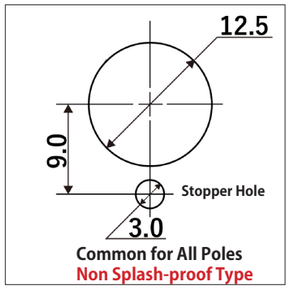

Common for All Poles
Non Splash-proof Type

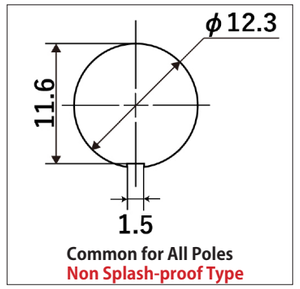

Common for All Poles
Non Splash-proof Type

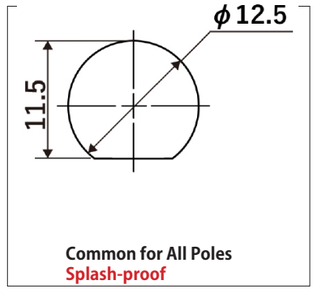

Common for All Poles
Splash-proof

Dimensions of Mounting Parts

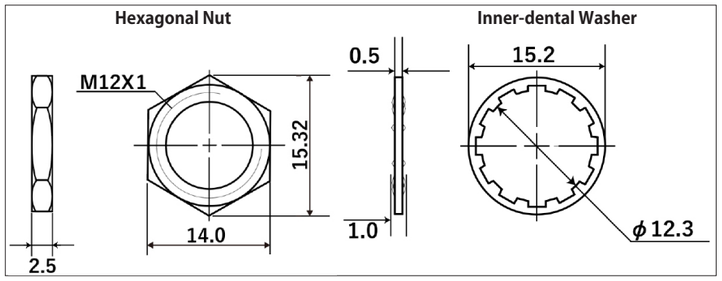

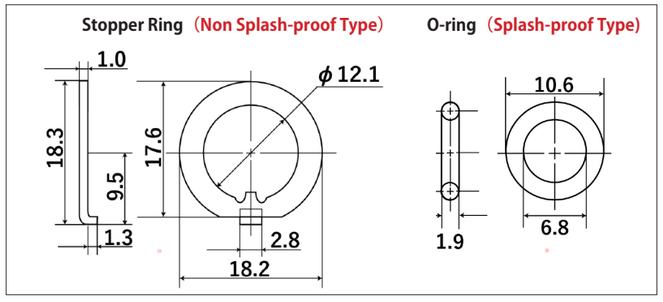

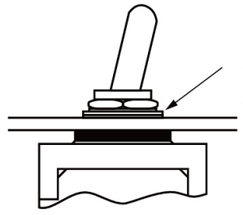

* For splash-proof models, please install the inner-dental washer from the top side of the panel.
The maximum panel thickness is 3.5 mm.

* For non-splash-proof models, only the lower nut is pre-installed on the main unit; other accessories are included separately. For splash-proof models, all accessories are pre-installed upon delivery.

* For products other than those listed above or for custom items, please contact us.

Toggle
A Series
250V/125VAC
25A
20A
15A
Solder Lug
Screw
Quick Connect
SP 2P
3P 4P

Splash-proof Cap、Other Parts

* The splash-proof type offers splash-proof performance on its own, but using it together with the splash-proof cap shown below can further enhance its splash protection.

Round Splash-proof Cap

Materials	Color	Part Number
Chloroprene Rubber	Black	6047-1481

Hexagonal Splash-proof Cap

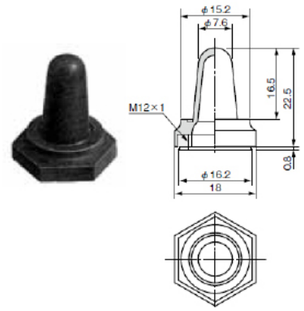

Materials	Color	Part Number
Chloroprene Rubber	Black	6047-0860

Round Dust-tight Cap

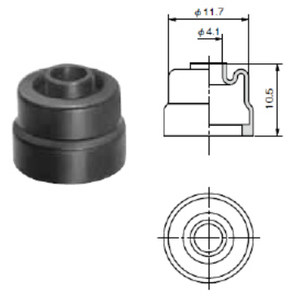

Materials	Color	Part Number
Chloroprene Rubber	Black	7847-8619

This Cap can be directry attached to the Bushing.
(It can be applied to wth M12Hexagonal Nut.)

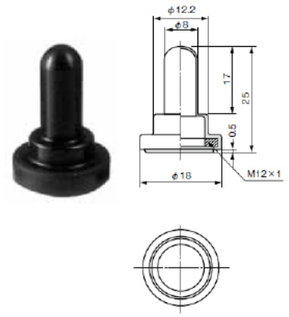

Materials	Color	Part Number
Silicone Rubber	Black	6047-5967
	Red	6047-6414
Chloroprene Rubber	Black	6047-5949
Ethylene-propylene Rubber	Black	6047-6170

Splash-proof Cap・Nut

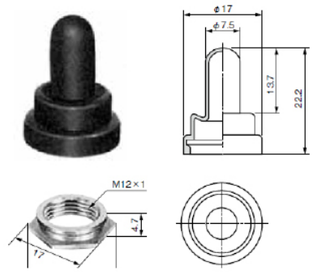

Materials	Color	Part Number
Chloroprene Rubber	Black	6047-2568

Other Parts

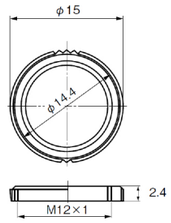

Round Nut

Part Number
9801-0134

ON・OFF Name Plate (Excl. Splash-proof Type)

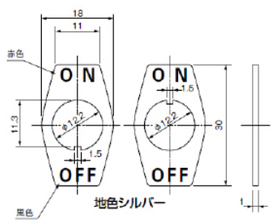

	Part Number
1	9804-0135
2	9804-1105

* For products other than those listed above or for custom items, please contact us.

Switch Tips

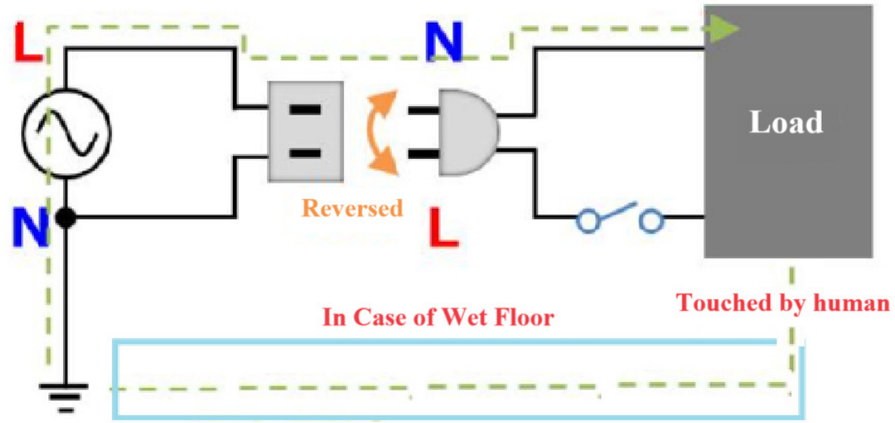

Did you know that even standard 100V AC power plugs have a proper orientation?
In a 100V AC system, one side of the power line is grounded (connected to earth). At the same time, many electronic and electrical devices use their metal chassis as a ground reference.
In such a setup, if the plug is inserted in reverse—as shown in the diagram—and a person touches the chassis while standing on a wet floor, a circuit may be formed, allowing current to flow through the person. This poses a serious risk of electric shock.

To prevent such accidents, we recommend using double-pole switching, where both the live (L) and neutral (N) lines are disconnected simultaneously using a two-pole switch.
Standard power switches typically control only the live (L) line, but double-pole switches interrupt both lines at once, completely isolating the device from the power source.
This provides a higher level of safety, particularly in environments where the floor may be wet or where high-voltage equipment is in use.

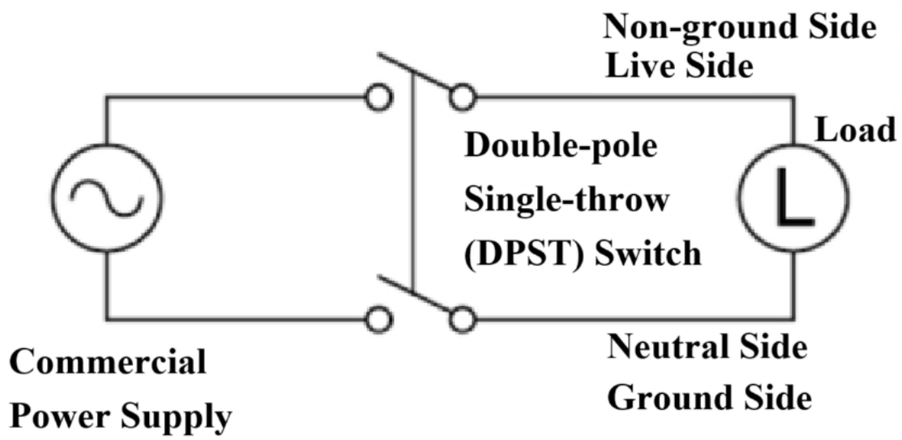

* For products other than those listed above or for custom items, please contact us.

Toggle
A Series
250V/125VAC
25A
20A
15A
Solder Lug
Screw
Quick Connect
SP 2P
3P 4P

Rocker

A Series

250V/125VAC
25A
20A
15A

Solder Lug
Screw
Quick Connect

SP 2P
3P 4P

Outline of the Series

OTAX offers a wide range of long-selling, high-rated, and highly reliable operational switches, including toggle, waterproof toggle, rocker, push-button, and rotary switches.

Features of the Series

1. All standard models use UL94 V-0 flame-retardant resin for the case.
2. Contact bounce during switching is minimized, ensuring stable operation across a wide current range—from low to high currents.
3. All models feature insert molding to eliminate gaps between metal and resin parts, preventing flux from entering the case.
4. A safety-oriented design ensures that even if the case is deformed by heat, insulation failure will not occur.
5. The switches are designed to meet various standards, offering excellent durability, environmental resistance, impact resistance, and vibration resistance.

A The frame adopts a short clinch structure, completely isolating it from conductive components and providing extremely high insulation performance.
B UL94 V-0 certified flame-retardant resin is used, offering outstanding resistance to arcing, heat, cold, moisture, and impact.
C A fixed contact embedding method is used to completely prevent flux from entering the case.

With this structure, electrical performance is not compromised by heat-induced terminal loosening or case deformation.

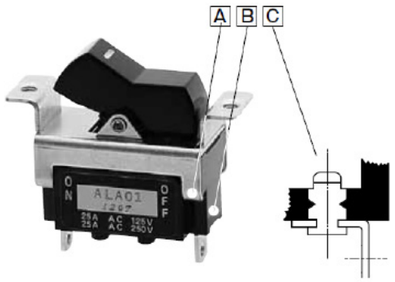

Common Specifications

Ratings □ =Type of Terminals Symbol（1, 2, 4, 5）

Voltage \ Symbol	0 □	1 □	2 □	Load	Notes
AC125/250V	25A	20A	15A	Resistive Load	Load only with Resistive, Power Factor=1
DC30V	25A	20A	15A		

* A resistive load refers to a load consisting solely of resistance. In actual circuits, however, there may be inductive, capacitive, or motor loads, each of which can generate inrush current. Therefore, when selecting a switch, be sure to choose a rating with sufficient margin above the steady-state current.
For more details, please refer to "Useful Advices and Precautions on Usage of Operational Switches."

Packaging Quantity	
SP	100 pcs
DP・3P・4P	50 pcs

Contact Resistance	10 mΩ Max. (DC2V 1A) (Initial value)
Withstanding Voltage	AC1,500V 1 Minute
Insulating Resistance	1,000MΩ Min. (DC500V)
Electrical Life	20,000 times
Operating Temperature Range	-20℃～ +70℃
Storage Temperature Range	-20℃～ +70℃
Hand-soldering Conditions	350 ± 3℃ Within 3 sec.

* For products other than those listed above or for custom items, please contact us.

Product Designations

Series Name	Poles	Operational-part Type	Switch Functions	Current Capacity	Type of Terminals
A		L	A	2	1

Poles	Symbol
1	(none)
2	(none)
3	3
4	4

Operational-part Type	Symbol
Rocker	L

Current Capacity	Symbol
25A 125/250V AC	0
20A 125/250V AC	1
15A 125/250V AC	2

Switch Functions			Symbol	
The Opposite Side	Center	Key Thread Side	SP 3P	DP 4P
ON	-	OFF	A	K
ON	-	ON	D	N
ON	OFF	ON	E	P
ON	-	<ON>	F	R
<ON>	OFF	<ON>	G	S

< > = Momentary

Type of Terminals	Symbol
Solder Lug	1
Screw Terminal	2
Quick Connect Terminal #187	4
Quick Connect Terminal #250	5

Screw Terminal and Quick Connect Terminal # 187 are with 15A, Quick Connect Terminal # 250 with 20,25A only.

■ Examples of Terminal Figures（SP/DP, ON-ON）

Solder Lug | Screw | Quick Connect l#187 | Quick Connect #250

SP

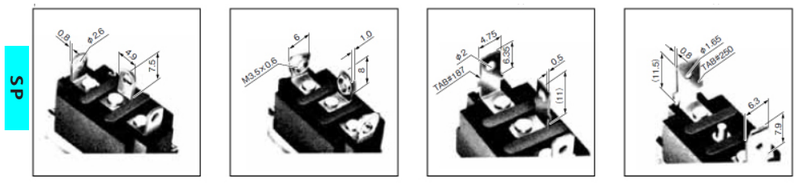

Solder Lug | Screwl | Quick Connect #187 | Quick Connect l#250

DP

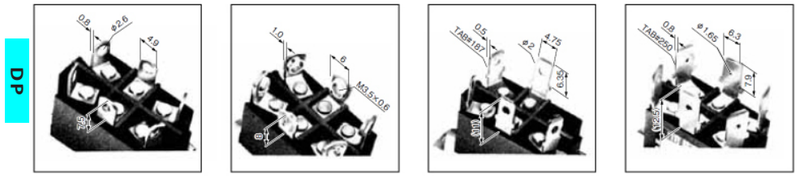

Silhouette（ALA21）

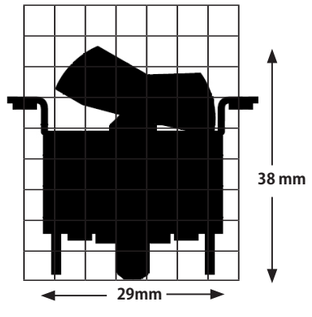

* For products other than those listed above or for custom items, please contact us.

Rocker
A Series
250V/125VAC
25A
20A
15A
Solder Lug
Screw
Quick Connect
SP 2P
3P 4P

Rocker

A Series

250V/125VAC
25A
20A
15A

Solder Lug
Screw
Quick Connect

SP 2P
3P 4P

Switch Names, Functions, Terminal Diagram

S P

Product Name	Resistive Load AC125/250V DC30V	Product Name	Resistive Load AC125/250V DC30V	Product Name	Resistive Load AC125/250V DC30V	Circuit	Functions <> = Momentary		
ALA01	25A	ALA11	20A	ALA21	15A	SPST	ON 1-3	—	OFF
ALD01	25A	ALD11	20A	ALD21	15A	SPDT	ON 2-3	—	ON 2-1
ALE01	25A	ALE11	20A	ALE21	15A	SPDT	ON 2-3	OFF	ON 2-1
ALF01	25A	ALF11	20A	ALF21	15A	SPDT	ON 2-3	—	<ON> 2-1
ALG01	25A	ALG11	20A	ALG21	15A	SPDT	<ON> 2-3	OFF	<ON> 2-1

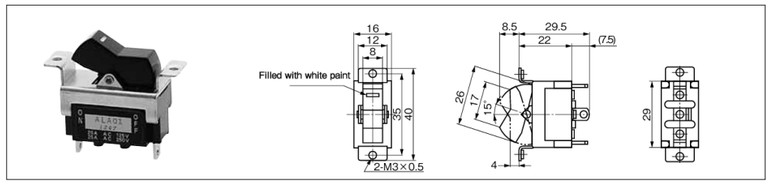

Terminal Diagram

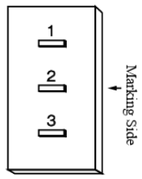

D P

Product Name	Resistive Load AC125/250V DC30V	Product Name	Resistive Load AC125/250V DC30V	Product Name	Resistive Load AC125/250V DC30V	Circuit	Functions <> = Momentary		
ALK01	25A	ALK11	20A	ALK21	15A	DPDT	ON 1-3 4-6	—	OFF
ALN01	25A	ALN11	20A	ALN21	15A	DPDT	ON 2-3 5-6	—	ON 2-1 5-4
ALP01	25A	ALP11	20A	ALP21	15A	DPDT	ON 2-3 5-6	OFF	ON 2-1 5-4
ALR01	25A	ALR11	20A	ALR21	15A	DPDT	ON 2-3 5-6	—	<ON> 2-1 5-4
ALS01	25A	ALS11	20A	ALS21	15A	DPDT	<ON> 2-3 5-6	OFF	<ON> 2-1 5-4

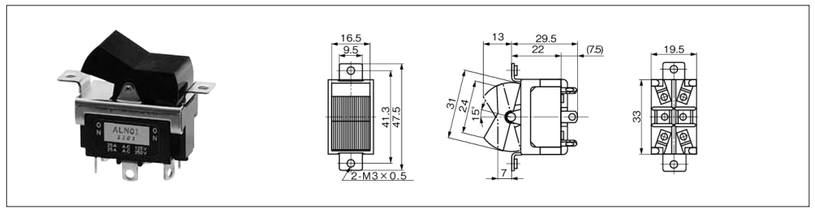

Terminal Diagram

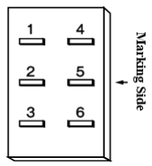

* For products other than those listed above or for custom items, please contact us.

Rocker

A Series

250V/125VAC
25A
20A
15A

Solder Lug
Screw
Quick Connect

SP 2P
3P 4P

3 P

Product Name	Resistive Load AC125/250V DC30V	Product Name	Resistive Load AC125/250V DC30V	Product Name	Resistive Load AC125/250V DC30V	Circuit	Functions <> = Momentary		
A3LA01	25A	A3LA11	20A	A3LA21	15A	3 Poles 单投	ON 1-3 4-6 7-9	—	OFF
A3LD01	25A	A3LD11	20A	A3LD21	15A	3 Poles 双投	ON 2-3 5-6 8-9	—	ON 2-1 5-4 8-7
A3LE01	25A	A3LE11	20A	A3LE21	15A	3 Poles 双投	ON 2-3 5-6 8-9	OFF	ON 2-1 5-4 8-7
A3LF01	25A	A3LF11	20A	A3LF21	15A	3 Poles 双投	ON 2-3 5-6 8-9	—	<ON> 2-1 5-4 8-7
A3LG01	25A	A3LG11	20A	A3LG21	15A	3 Poles 双投	<ON> 2-3 5-6 8-9	OFF	<ON> 2-1 5-4 8-7

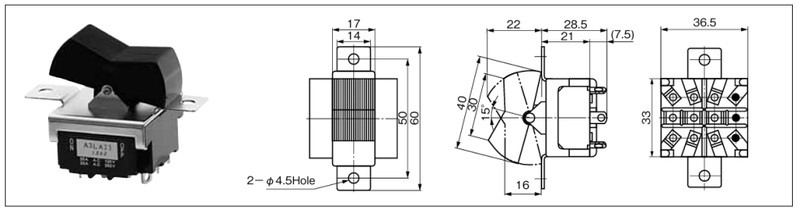

Terminal Diagram

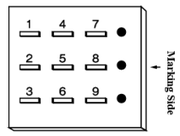

4 P

Product Name	Resistive Load AC125/250V DC30V	Product Name	Resistive Load AC125/250V DC30V	Product Name	Resistive Load AC125/250V DC30V	Circuit	Functions <> = Momentary		
A4LK01	25A	A4LK11	20A	A4LK21	15A	4PST	ON 1-3 4-6 7-9 10-12	—	OFF
A4LN01	25A	A4LN11	20A	A4LN21	15A	4 Poles 双投	ON 2-3 5-6 8-9 11-12	—	ON 2-1 5-4 8-7 11-10
A4LP01	25A	A4LP11	20A	A4LP21	15A	4 Poles 双投	ON 2-3 5-6 8-9 11-12	OFF	ON 2-1 5-4 8-7 11-10
A4LR01	25A	A4LR11	20A	A4LR21	15A	4 Poles 双投	ON 2-3 5-6 8-9 11-12	—	<ON> 2-1 5-4 8-7 11-10
A4LS01	25A	A4LS11	20A	A4LS21	15A	4 Poles 双投	<ON> 2-3 5-6 8-9 11-12	OFF	<ON> 2-1 5-4 8-7 11-10

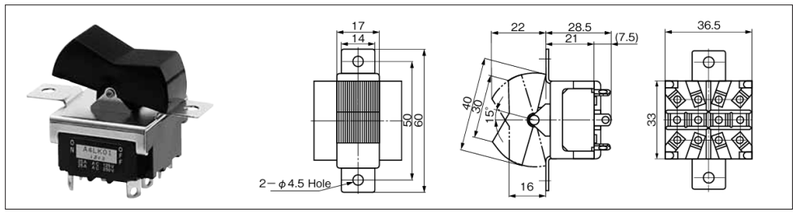

Terminal Diagram

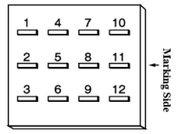

* For products other than those listed above or for custom items, please contact us.

Dimensions of Terminals, Mounting Holes, and Mounting Parts

Dimensions of Terminals A L

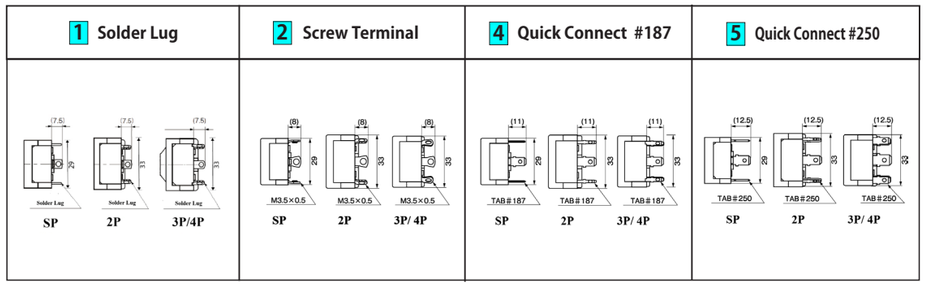

Mounting Hole Dimensions

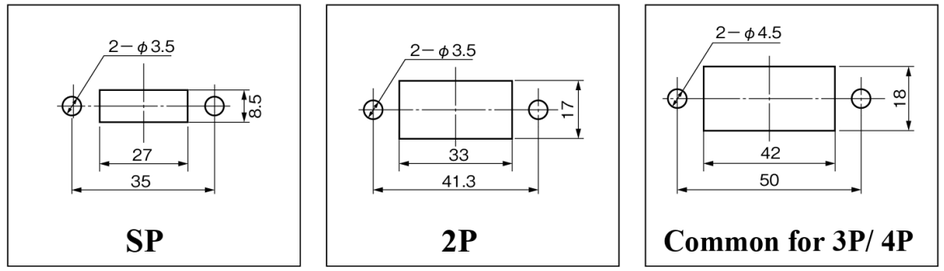

Switch Tips

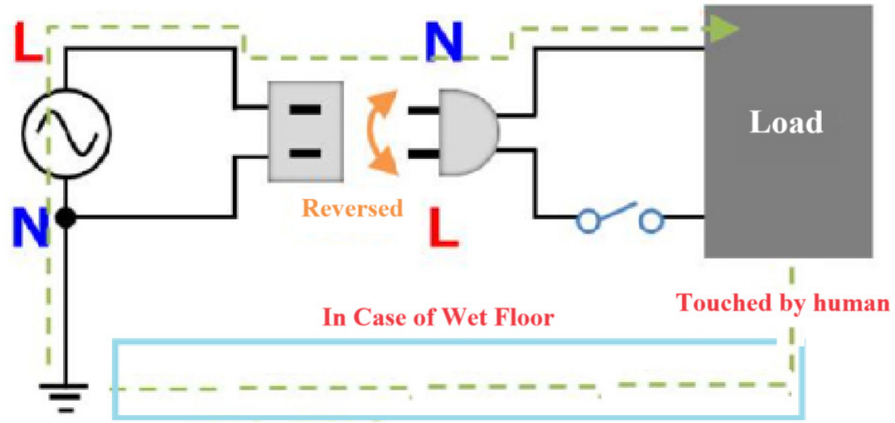

Did you know that even standard 100V AC power plugs have a proper orientation?
In a 100V AC system, one side of the power line is grounded (connected to earth). At the same time, many electronic and electrical devices use their metal chassis as a ground reference.
In such a setup, if the plug is inserted in reverse—as shown in the diagram—and a person touches the chassis while standing on a wet floor, a circuit may be formed, allowing current to flow through the person. This poses a serious risk of electric shock.

To prevent such accidents, we recommend using double-pole switching, where both the live (L) and neutral (N) lines are disconnected simultaneously using a two-pole switch. Standard power switches typically control only the live (L) line, but double-pole switches interrupt both lines at once, completely isolating the device from the power source.
This provides a higher level of safety, particularly in environments where the floor may be wet or where high-voltage equipment is in use.

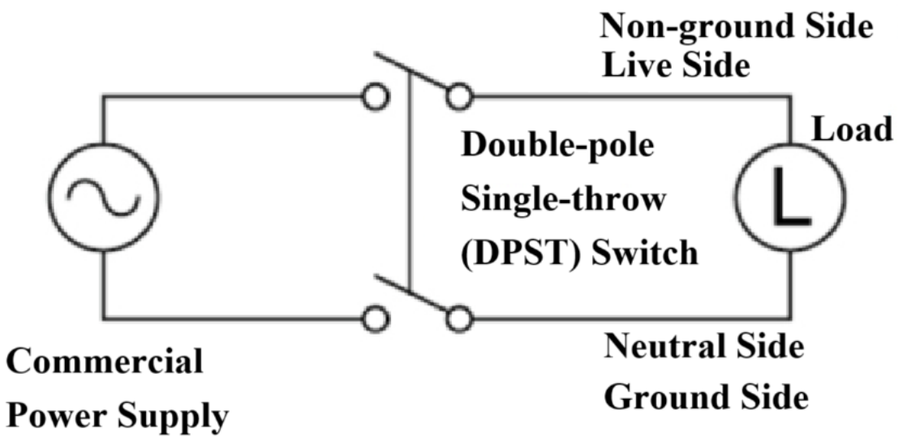

Pushbutton

A Series

250V/125VAC
25A
20A
15A

Solder Lug
Screw
Quick Connect

SP 2P

Outline of the Series

OTAX offers a wide range of long-selling, high-rated, and highly reliable operational switches, including toggle, waterproof toggle, rocker, push-button, and rotary switches.

Features of the Series

1. All standard models use UL94 V-0 flame-retardant resin for the case.
2. Contact bounce during switching is minimized, ensuring stable operation across a wide current range—from low to high currents.
3. All models feature insert molding to eliminate gaps between metal and resin parts, preventing flux from entering the case.
4. A safety-oriented design ensures that even if the case is deformed by heat, insulation failure will not occur.
5. The switches are designed to meet various standards, offering excellent durability, environmental resistance, impact resistance, and vibration resistance.

A The frame adopts a short clinch structure, completely isolating it from conductive components and providing extremely high insulation performance.
B UL94 V-0 certified flame-retardant resin is used, offering outstanding resistance to arcing, heat, cold, moisture, and impact.
C A fixed contact embedding method is used to completely prevent flux from entering the case.

With this structure, electrical performance is not compromised by heat-induced terminal loosening or case deformation.

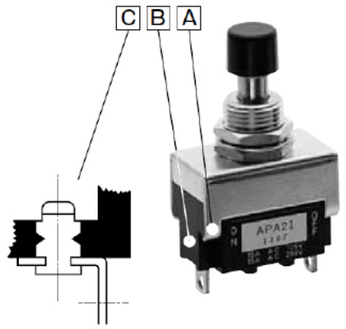

Common Specifications

Ratings □ =Type of Terminals Symbol（1, 2, 4, 5）

Voltage \ Symbol	0 □	1 □	2 □	Load	Notes
AC125/250V	25A	20A	15A	Resistive Load	Load only with Resistive, Power Factor=1
DC30V	25A	20A	15A		

* A resistive load refers to a load consisting solely of resistance. In actual circuits, however, there may be inductive, capacitive, or motor loads, each of which can generate inrush current. Therefore, when selecting a switch, be sure to choose a rating with sufficient margin above the steady-state current.
For more details, please refer to "Useful Advices and Precautions on Usage of Operational Switches."

Packaging Quantity	
SP・DP	100 pcs
3P・4P	50 pcs

Contact Resistance	10 mΩ Max. (DC2V 1A) (Initial value)
Withstanding Voltage	AC1,500V 1 Minute
Insulating Resistance	1,000MΩ Min. (DC500V)
Electrical Life	20,000 times
Operating Temperature Range	-20℃～ +70℃
Storage Temperature Range	-20℃～ +70℃
Hand-soldering Conditions	350 ± 3℃ Within 3 sec.

* For products other than those listed above or for custom items, please contact us.

Product Designations

Series Name	Operational-part Type	Switch Functions	Current Capacity	Type of Terminals
A	P	A	2	1

Operational-part	Symbol
One Pushbutton	P
Two Pushbutton	B

Current Capacity	Symbol
25A 125/250V AC	0
20A 125/250V AC	1
15A 125/250V AC	2

SwitchFunctions			Symbol	
The Initial Status	When the Button is pushed	When the Button is pushed	SP 3P	DP 4P
ON	-	OFF	A	K
ON	-	ON	D	N
ON	OFF	ON *	E	P
ON	-	<ON>	F	R

< > = Momentary
* = When the Button is pushed twice

Switch Functions F, R are for One-pushbutton、Switch Functions E, P are for Two-pushbutton only respectively.

Type of Terminals	Symbol
Solder Lug	1
Screw Terminal	2
Quick Connect Terminal #187	4
Quick Connect Terminal #250	5

Screw Terminal and Quick Connect Terminal # 187 are with 15A, Quick Connect Terminal # 250 with 20,25A only.

■ Examples of Terminal Figures（SP/ DP, ON-ON Type）

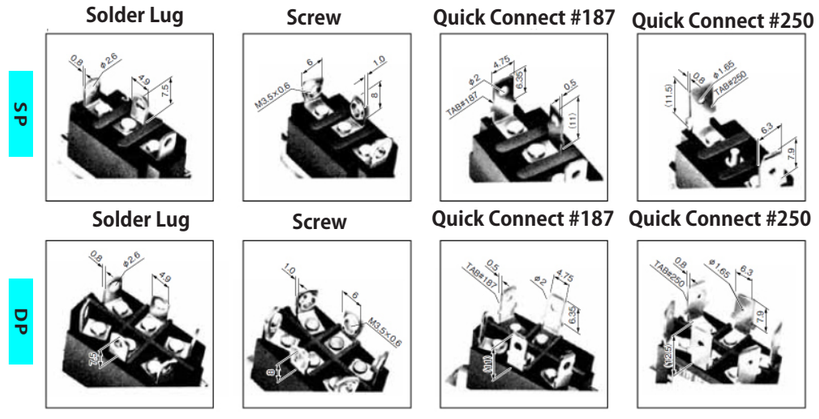

Silhouette（APD21）

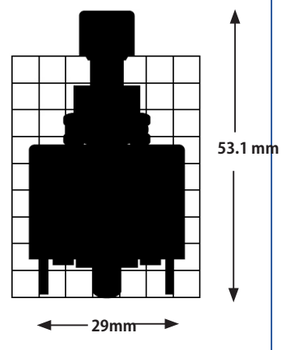

* For products other than those listed above or for custom items, please contact us.

Pushbutton

A Series

250V/125VAC
25A
20A
15A

Solder Lug
Screw
Quick Connect

SP 2P

Pushbutton

A Series

250V/125VAC
25A
20A
15A

Solder Lug
Screw
Quick Connect

SP 2P

Switch Names, Functions, Terminal Diagram

S P

Product Name	Resistive Load AC125/250V DC30V	Product Name	Resistive Load AC125/250V DC30V	Product Name	Resistive Load AC125/250V DC30V	Circuit	Functions <> = Momentary Alternate		
APA01	25A	APA11	20A	APA21	15A	SPST	ON 1-3	—	OFF
APD01	25A	APD11	20A	APD21	15A	SPDT	ON 2-3	—	ON 2-1
Product Name		Product Name		Product Name		Circuit	Initial Button Position	When the Button is Pushed	
APF01	25A	APF11	20A	APF21	15A	SPDT	ON 2-3	‹ON› 2-1	

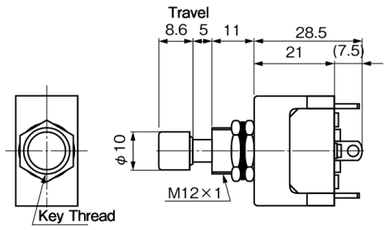

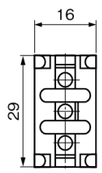

■ Terminal Diagram

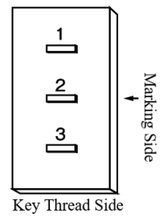

D P

Product Name	Resistive Load AC125/250V DC30V	Product Name	Resistive Load AC125/250V DC30V	Product Name	Resistive Load AC125/250V DC30V	Circuit	Functions <> = Momentary Alternate		
APK01	25A	APK11	20A	APK21	15A	2PST	ON 1-3 4-6	—	OFF
APN01	25A	APN11	20A	APN21	15A	2PDT	ON 2-3 5-6	—	ON 2-1 5-4
Product Name		Product Name		Product Name		Circuit	Initial Button Position	When the Button is Pushed	
APR01	25A	APR11	20A	APR21	15A	2PDT	ON 2-3 5-6	‹ON› 2-1 5-4	

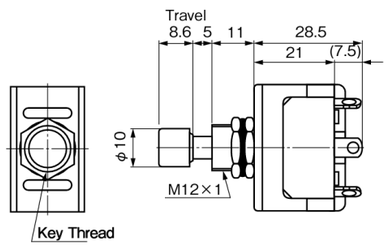

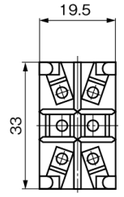

■ Terminal Diagram

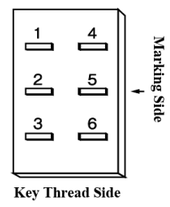

* For products other than those listed above or for custom items, please contact us.

Pushbutton

A Series

250V/125VAC
25A
20A
15A

Solder Lug
Screw
Quick Connect

SP 2P

S P

Product Name	Resistive Load AC125/250V DC30V	Product Name	Resistive Load AC125/250V DC30V	Product Name	Resistive Load AC125/250V DC30V	Circuit	Functions <> = Momentary		
ABA01	25A	ABA11	20A	ABA21	15A	SPST	ON 1-3	—	OFF
ABD01	25A	ABD11	20A	ABD21	15A	SPDT	ON 2-3	—	ON 2-1
ABE01	25A	ABE11	20A	ABE21	15A	SPDT	ON 2-3	OFF	‹ON 2-1

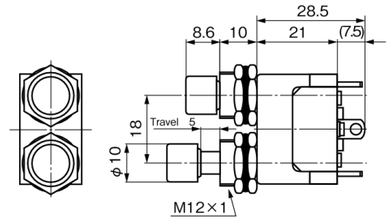

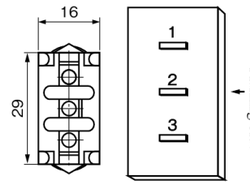

■ Terminal Diagram

D P

Product Name	Resistive Load AC125/250V DC30V	Product Name	Resistive Load AC125/250V DC30V	Product Name	Resistive Load AC125/250V DC30V	Circuit	Functions <> = Momentary		
ABK01	25A	ABK11	20A	ABK21	15A	2PolesST	ON 1-3 4-6	—	OFF
ABN01	25A	ABN11	20A	ABN21	15A	2PolesDT	ON 2-3 5-6	—	ON 2-1 5-4
ABP01	25A	ABP11	20A	ABP21	15A	2PolesDT	ON 2-3 5-6	OFF	ON 2-1 5-4

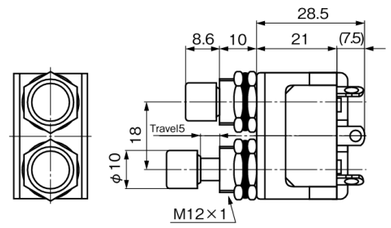

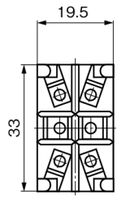

■ Terminal Diagram

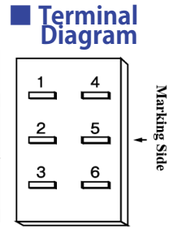

* For products other than those listed above or for custom items, please contact us.

Dimensions of Terminals, Mounting Holes, and Mounting Parts

■ Dimensions of Terminals

A P □ □ ■ or A B □ □ ■

1 Solder Lug	2 Screw Terminal	4 Quick Connect #187	5 Quick Connect #250

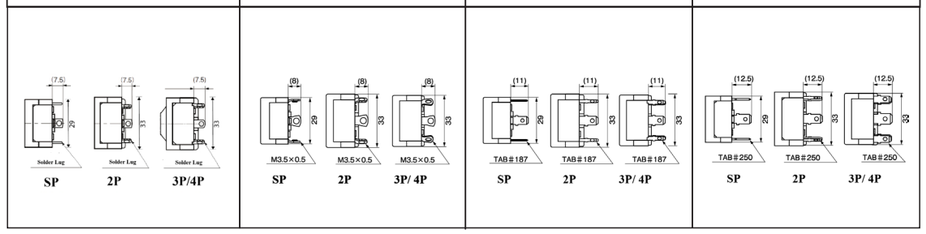

■ Mounting Hole Dimensions

One-pushbutton

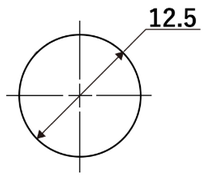

Common for All Poles

Two-pushbutton

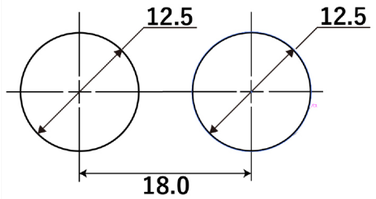

Common for All Poles

■ Mounting Parts Dimensions

Hexagonal Nut

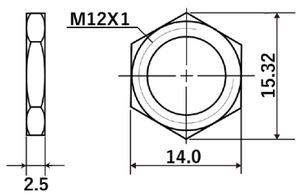

Inner-dental Washer

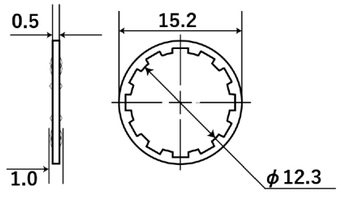

* Only the lower nut is assembled to the main body, and the others are attatched.

■ Special Remarks

APF □ □
APR □ □
The position of the plunger is off-center for these types.

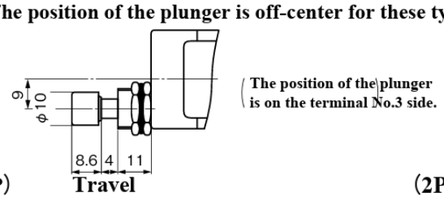

(SP)

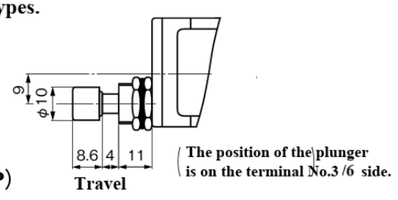

(2P)

* For products other than those listed above or for custom items, please contact us.

Switch Tips

■ Simultaneous Switching of 2-Pole Power Switch

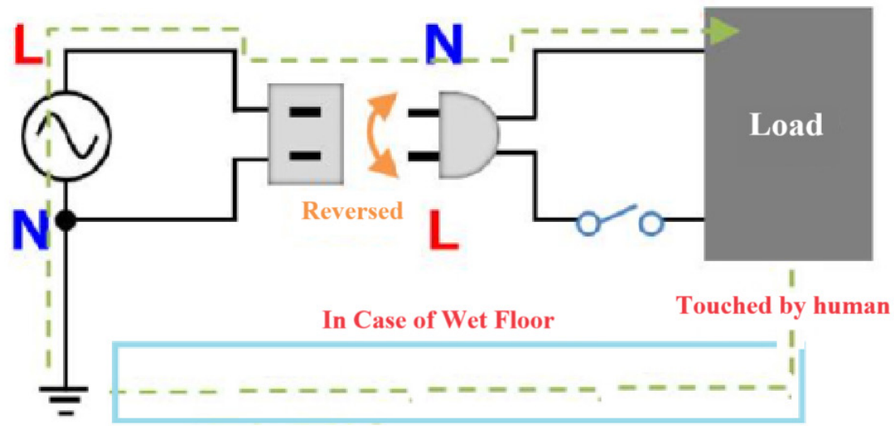

Did you know that even standard 100V AC power plugs have a proper orientation?
In a 100V AC system, one side of the power line is grounded (connected to earth). At the same time, many electronic and electrical devices use their metal chassis as a ground reference.
In such a setup, if the plug is inserted in reverse—as shown in the diagram—and a person touches the chassis while standing on a wet floor, a circuit may be formed, allowing current to flow through the person. This poses a serious risk of electric shock.

To prevent such accidents, we recommend using double-pole switching, where both the live (L) and neutral (N) lines are disconnected simultaneously using a two-pole switch. Standard power switches typically control only the live (L) line, but double-pole switches interrupt both lines at once, completely isolating the device from the power source.
This provides a higher level of safety, particularly in environments where the floor may be wet or where high-voltage equipment is in use.

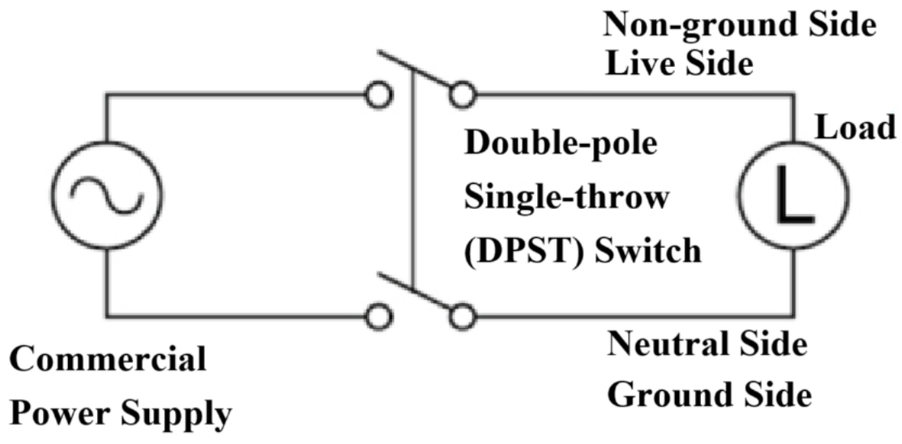

* For products other than those listed above or for custom items, please contact us.

Pushbutton
A Series
250V/125VAC
25A
20A
15A
Solder Lug
Screw
Quick Connect
SP 2P

Rotary

A Series

250V/125VAC
25A
20A
15A

Solder Lug
Screw
Quick Connect

2P 4P

Outline of the Series

OTAX offers a wide range of long-selling, high-rated, and highly reliable operational switches, including toggle, waterproof toggle, rocker, push-button, and rotary switches.

Features of the Series

1. All standard models use UL94 V-0 flame-retardant resin for the case.
2. Contact bounce during switching is minimized, ensuring stable operation across a wide current range—from low to high currents.
3. All models feature insert molding to eliminate gaps between metal and resin parts, preventing flux from entering the case.
4. A safety-oriented design ensures that even if the case is deformed by heat, insulation failure will not occur.
5. The switches are designed to meet various standards, offering excellent durability, environmental resistance, impact resistance, and vibration resistance.

A The frame adopts a short clinch structure, completely isolating it from conductive components and providing extremely high insulation performance.

B UL94 V-0 certified flame-retardant resin is used, offering outstanding resistance to arcing, heat, cold, moisture, and impact.

C A fixed contact embedding method is used to completely prevent flux from entering the case.

With this structure, electrical performance is not compromised by heat-induced terminal loosening or case deformation.

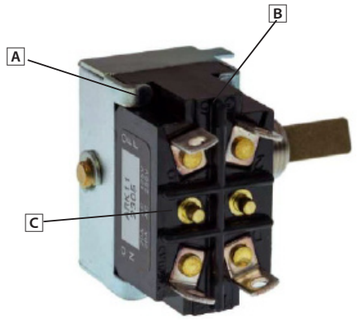

Common Specifications

Ratings □ =Type of Terminals Symbol（1, 2, 4, 5）

Voltage \ Symbol	0 □	1 □	2 □	Load	Notes
AC125/250V	25A	20A	15A	Resistive Load	Load only with Resistive, Power Factor=1
DC30V	25A	20A	15A		

* A resistive load refers to a load consisting solely of resistance. In actual circuits, however, there may be inductive, capacitive, or motor loads, each of which can generate inrush current. Therefore, when selecting a switch, be sure to choose a rating with sufficient margin above the steady-state current.
For more details, please refer to "Useful Advices and Precautions on Usage of Operational Switches."

Contact Resistance	10 mΩ Max. (DC2V 1A) (Initial value)
Withstanding Voltage	AC1,500V 1 Minute
Insulating Resistance	1,000MΩ Min. (DC500V)
Electrical Life	20,000 times
Operating Temperature Range	-20℃～ +70℃
Storage Temperature Range	-20℃～ +70℃
Hand-soldering Conditions	350 ± 3℃ within 3 sec.

Packaging Quantity
100 pcs

otax
* For products other than those listed above or for custom items, please contact us.
OTAX Co., Ltd. 1215, Nippacho, Kohoku-ward, Yokohama, Kanagawa, 223-8558 Japan https://www.otax-en.com/

Product Designations

Series Name	Poles	Operational-part Type	Switch Functions	Current Capacity	Type of Terminals
A		R	K	2	1

Poles	Symbol
2	(none)
4	4

Operational-part	Symbol
Rotary	R

Current Capacity	Symbol
25A 125/250V AC	0
20A 125/250V AC	1
15A 125/250V AC	2

SwitchFunctions			Symbol
Antclockwise	Center	Clockwise	DP 4P
ON	-	OFF	K
ON	-	ON	N
ON	OFF	ON	P

Type of Terminals	Symbol
Solder Lug	1
Screw Terminal	2
Quick Connect Terminal #187	4
Quick Connect Terminal #250	5

Screw Terminal and Quick Connect Terminal # 187 are with 15A, Quick Connect Terminal # 250 with 20,25A only.

Silhouette（ARN21）

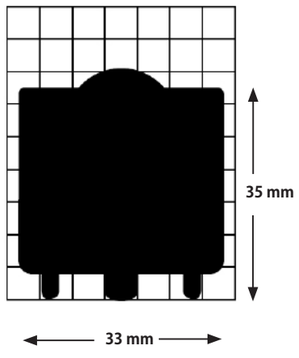

■ Examples of Terminal Figures（DP, ON-ON Type）

Solder Lug

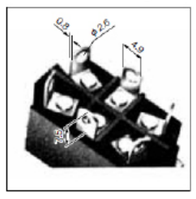

Screw

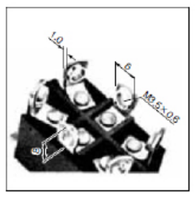

Quick Connect #187

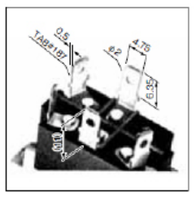

Quick Connect #250

Rotary

A Series

250V/125VAC
25A
20A
15A

Solder Lug
Screw
Quick Connect

2P 4P

* For products other than those listed above or for custom items, please contact us.
OTAX Co., Ltd. 1215, Nippacho, Kohoku-ward, Yokohama, Kanagawa, 223-8558 Japan https://www.otax-en.com/ otax

Switch Names, Functions, Terminal Diagram

2 P

Product Name	Resistive Load AC125/250V DC30V	Product Name	Resistive Load AC125/250V DC30V	Product Name	Resistive Load AC125/250V DC30V	Circuit	Functions <> はMomentary		
ARK01	25A	ARK11	20A	ARK21	15A	DPST	ON 1-3 4-6	—	OFF
ARN01	25A	ARN11	20A	ARN21	15A	DPDT	ON 2-3 5-6	—	ON
ARP01	25A	ARP11	20A	ARP21	15A	DPDT	ON 2-3 5-6	OFF	ON

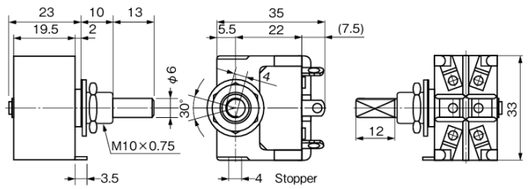

■ Terminal Diagram

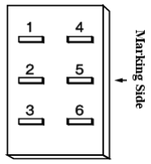

* Shaft shapes can be selected from round, D-cut, and knurling.

4 P

Product Name	Resistive Load AC125/250V DC30V	Product Name	Resistive Load AC125/250V DC30V	Product Name	Resistive Load AC125/250V DC30V	Circuit	Functions <> はMomentary		
A4RK01	25A	A4RK11	20A	A4RK21	15A	4PST	ON 1-3 4-6 7-9 10-12	—	OFF
A4RN01	25A	A4RN11	20A	A4RN21	15A	4PDT	ON 2-3 5-6 8-9 11-12	—	ON 2-1 5-4 8-7 11-10
A4RP01	25A	A4RP11	20A	A4RP21	15A	4PDT	ON 2-3 5-6 8-9 11-12	OFF	ON 2-1 5-4 8-7 11-10

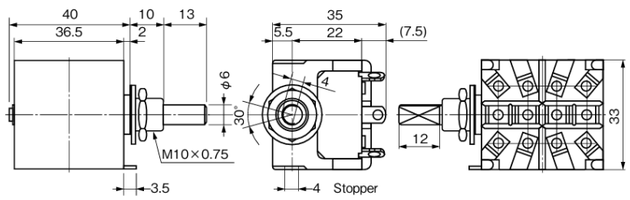

* Shaft shapes can be selected from round, D-cut, and knurling.

■ Terminal Diagram

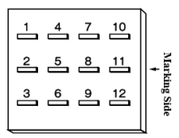

* For products other than those listed above or for custom items, please contact us.

OTAX Co., Ltd. 1215, Nippacho, Kohoku-ward, Yokohama, Kanagawa, 223-8558 Japan https://www.otax-en.com/

Dimensions of Terminals, Mounting Holes, and Mounting Parts

■ Dimensions of Terminals A R

1 Solder Lug	2 Screw Terminal	4 Quick Connect #187	5 Quick Connect #250

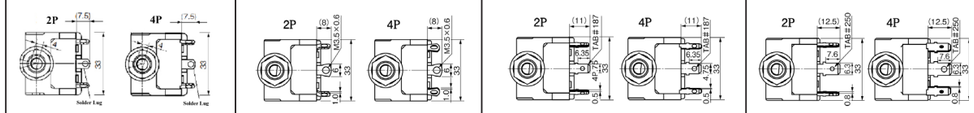

■ Mounting Hole Dimensions

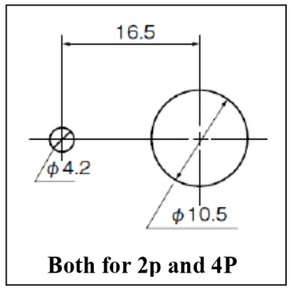

■ Mounting Parts Dimensions

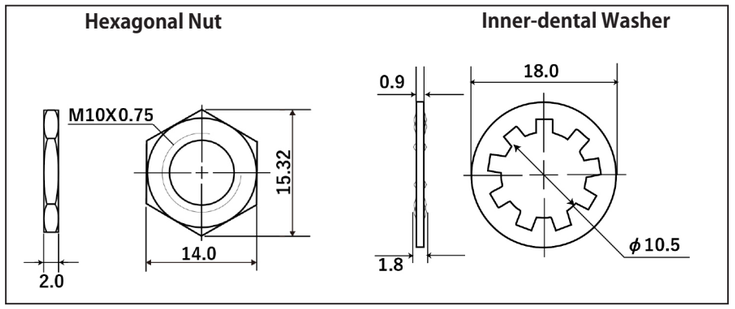

* Only the lower nut is assembled to the main body, and the others are attatched.

* For products other than those listed above or for custom items, please contact us.

OTAX Co., Ltd. 1215, Nippacho, Kohoku-ward, Yokohama, Kanagawa, 223-8558 Japan https://www.otax-en.com/

Toggle

AV Series

250V/125VAC
25A
20A
15A
10A

Quick Connect Terminal

SP 2P
3P 4P

Outline of the Series

While maintaining the high performance of the A series, this lineup is offered at a more affordable price.
Available in toggle and rocker switch types.

Common Specifications

Ratings

Symbol / Voltage	05	15	25	35	Load	Notes
AC125/250V	25A	20A	15A	10A	Resistive Load	Load only with Resistive, Power Factor=1
DC30V	25A	20A	15A	10A		

* A resistive load refers to a load consisting solely of resistance. In actual circuits, however, there may be inductive, capacitive, or motor loads, each of which can generate inrush current. Therefore, when selecting a switch, be sure to choose a rating with sufficient margin above the steady-state current.
For more details, please refer to "Useful Advices and Precautions on Usage of Operational Switches."

Packaging Quantity	
SP・DP	100 pcs
3P・4P	50 pcs

Contact Resistance	10 mΩ Max. (DC2V 1A Initial Value)
Withstanding Voltage	AC1,500V 1 Minute
Insulating Resistance	1,000MΩ Min. (DC500V)
Electrical Life	20,000 times
Operating Temperature Range	-20℃～ +70℃
Storage Temperature Range	-20℃～ +70℃
Hand-soldering Conditions	350 ± 3℃ within 3 sec.

* For products other than those listed above or for custom items, please contact us.

Product Designations

Series Name		Poles	Operational-part Type	Switch Functions	Current Capacity	Type of Terminals
A	V		T	A	2	5

Poles	Symbol
1	(none)
2	(none)
3	3
4	4

Operational-part	Symbol
Toggle	T

Current Capacity	Symbol
25A 125/250V AC	0
20A 125/250V AC	1
15A 125/250V AC	2
10A 125/250V AC	3

SwitchFunctions			Symbol	
The Opposite Side	Center	Key Thread Side	SP 3P	DP 4P
ON	-	OFF	A	K
ON	-	ON	D	N

Type of Terminals	Symbol
Quick Connect Terminal #250	5

Quick Connect Terminal#250

Silhouette（AVTA05）

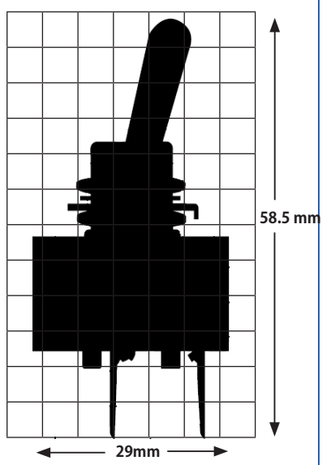

* For products other than those listed above or for custom items, please contact us.

Toggle
AV Series
250V/125VAC
25A
20A
15A
10A
Quick Connect Terminal
SP 2P
3P 4P

Switch Names, Functions, Terminal Diagram

S P

Product Name	Resistive Load AC125/250V DC30V	Product Name	Resistive Load AC125/250V DC30V	Circuit	Functions		
AVTA05	25A	AVTA25	15A	SPST	ON 2-3	—	OFF
AVTD05	25A	AVTD25	15A	SPDT	ON 2-3	—	ON 2-1
AVTA15	20A	AVTA35	10A	SPST	ON 2-3	—	OFF
AVTD15	20A	AVTD35	10A	SPDT	ON 2-3	—	ON 2-1

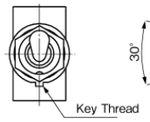

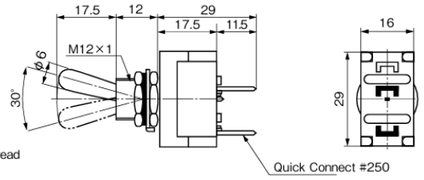

■ Terminal Diagram

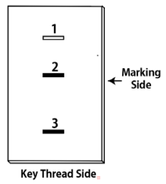

D P

Product Name	Resistive Load AC125/250V DC30V	Product Name	Resistive Load AC125/250V DC30V	Circuit	Functions		
AVTK05	25A	AVTK25	15A	DPST	ON 2-3 5-6	—	OFF
AVTN05	25A	AVTN25	15A	DPDT	ON 2-3 5-6	—	ON 2-1 5-4
AVTK15	20A	AVTK35	10A	DPST	ON 2-3 5-6	—	OFF
AVTN15	20A	AVTN35	10A	DPDT	ON 2-3 5-6	—	ON 2-1 5-4

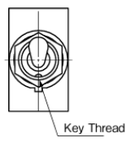

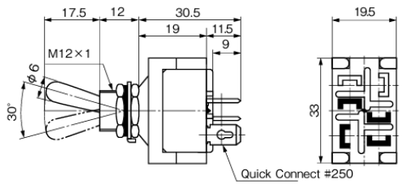

■ Terminal Diagram

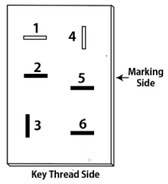

3 P

Product Name	Resistive Load AC125/250V DC30V	Product Name	Resistive Load AC125/250V DC30V	Circuit	Functions		
AV3TA05	25A	AV3TA25	15A	3PST	ON 2-3 5-6 8-9	—	OFF
AV3TD05	25A	AV3TD25	15A	3PDT	ON 2-3 5-6 8-9	—	ON 2-1 5-4 8-7
AV3TA15	20A	AV3TA35	10A	3PST	ON 2-3 5-6 8-9	—	OFF
AV3TD15	20A	AV3TD35	10A	3PDT	ON 2-3 5-6 8-9	—	ON 2-1 5-4 8-7

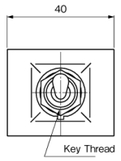

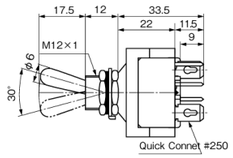

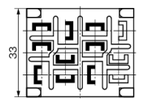

❖ The case is the same as that of 4P.

■ Terminal Diagram

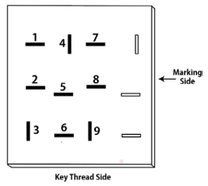

4 P

Product Name	Resistive Load AC125/250V DC30V	Product Name	Resistive Load AC125/250V DC30V	Circuit	Functions		
AV4TK05	25A	AV4TK25	15A	4PST	ON 2-3 5-6 8-9 11-12	—	OFF
AV4TN05	25A	AV4TN25	15A	4PDT	ON 2-3 5-6 8-9 11-12	—	ON 2-1 5-4 8-7 11-10
AV4TK15	20A	AV4TK35	10A	4PST	ON 2-3 5-6 8-9 11-12	—	OFF
AV4TN15	20A	AV4TN35	10A	4PDT	ON 2-3 5-6 8-9 11-12	—	ON 2-1 5-4 8-7 11-10

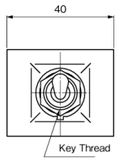

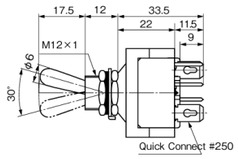

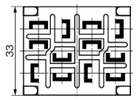

■ Terminal Diagram

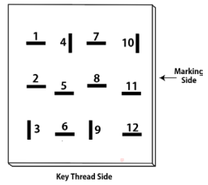

Dimensions of Mounting Holes and Mounting Parts

■ Mounting Hole Dimensions

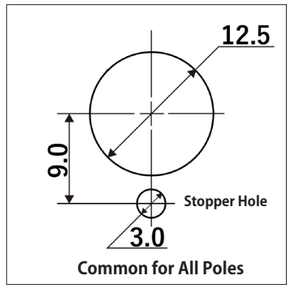

With Stopper Ring

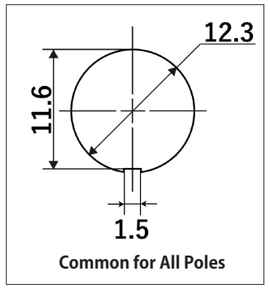

Without Stopper Ring

■ Mounting Parts Dimensions

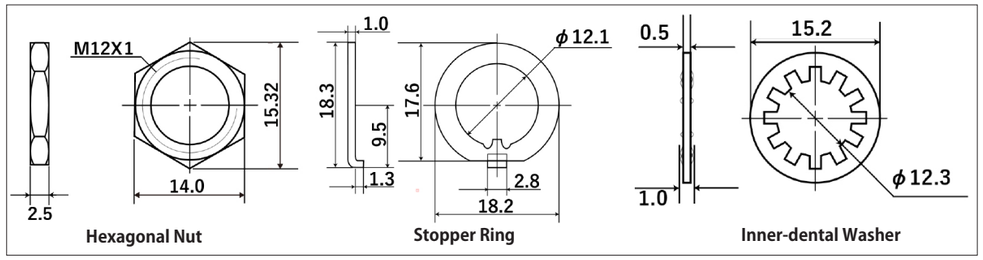

* Regarding Mounting Parts, only the lower nut is pre-installed on the main unit; other accessories are included separately.

Compliance with the European RoHS Directive

All DIP switches, control switches, connectors, and terminal blocks manufactured by OTAX comply with the following RoHS Directive:
Directive 2011/65/EU of the European Parliament and of the Council on the restriction of the use of certain hazardous substances in electrical and electronic equipment (RoHS).

Our products do not contain any of the ten specified hazardous substances (except for exempted applications):
Lead (Pb), Mercury (Hg),Cadmium (Cd), Hexavalent chromium (Cr^{6+}), Polybrominated biphenyls (PBB), Polybrominated diphenyl ethers (PBDE), Di(2-ethylhexyl) phthalate (DEHP), Butyl benzyl phthalate (BBP), Dibutyl phthalate (DBP), Diisobutyl phthalate (DIBP)

* For products other than those listed above or for custom items, please contact us.

Splash-proof Cap and Other Parts

Round Splash-proof Cap

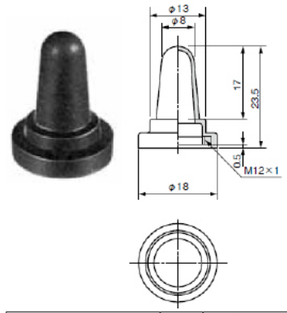

Materials	Color	Part Number
Chloroprene Rubber	Black	6047-1481

Hexagonal Splash-proof Cap

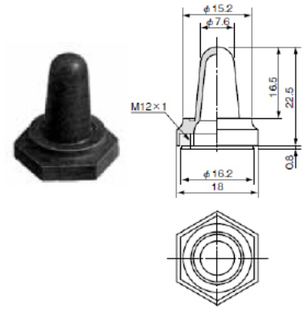

Materials	Color	Part Number
Chloroprene Rubber	Black	6047-0860

Round Dust-tight Cap

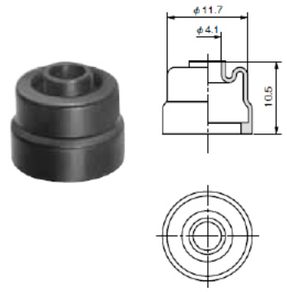

Materials	Color	Part Number
Chloroprene Rubber	Black	7847-8619

This Cap can be directry attached to the Bushing.
(It can be applied to wth M12Hexagonal Nut.)

Splash-proof Cap・Nut

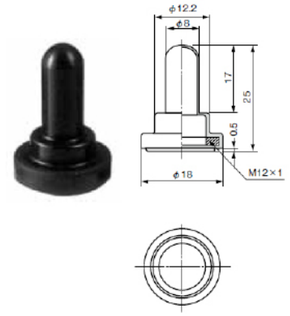

Materials	Color	Part Number
Silicone Rubber	Black	6047-5967
	Red	6047-6414
Chloroprene Rubber	Black	6047-5949
Ethylene-propylene Rubber	Black	6047-6170

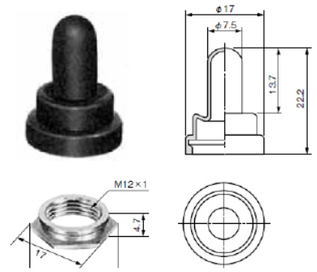

Materials	Color	Part Number
Chloroprene Rubber	Black	6047-2568

Other Parts

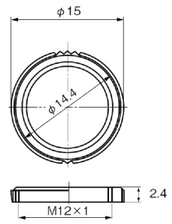

Round Nut

Part Number
9801-0134

ON・OFFName Plate

Colors
Base:Silver
ON: Red
OFF: Black

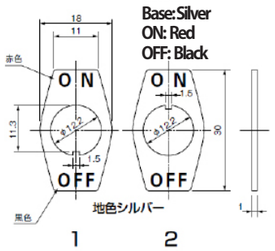

	Part Number
1	9804-0135
2	9804-1105

* For products other than those listed above or for custom items, please contact us.

Toggle
AV Series
250V/125VAC
25A
20A
15A
10A
Quick Connect Terminal
SP 2P
3P 4P

Rocker

AV Series

250V/125VAC
25A
20A
15A
10A

Quick Connect Terminal

SP 2P

Outline of the Series

While maintaining the high performance of the A series, this lineup is offered at a more affordable price.
Available in toggle and rocker switch types.

Common Specifications

Ratings

Voltage \ Symbol	05	15	25	35	Load	Notes
AC125/250V	25A	20A	15A	10A	Resistive Load	Load only with Resistive, Power Factor=1
DC30V	25A	20A	15A	10A		

* A resistive load refers to a load consisting solely of resistance. In actual circuits, however, there may be inductive, capacitive, or motor loads, each of which can generate inrush current. Therefore, when selecting a switch, be sure to choose a rating with sufficient margin above the steady-state current.
For more details, please refer to "Useful Advices and Precautions on Usage of Operational Switches."

Packaging Quantity	
SP	100 pcs
DP	50 pcs

Contact Resistance	10 mΩ Max. (DC2V 1A, Initial Value)
Withstanding Voltage	AC1,500V 1 Minute
Insulating Resistance	1,000MΩ Min. (DC500V)
Electrical Life	20,000 times
Operating Temperature Range	-20℃～ +70℃
Storage Temperature Range	-20℃～ +70℃
Hand-soldering Conditions	350 ± 3℃ within 3 sec.

* For products other than those listed above or for custom items, please contact us.

Product Designations

Series Name		Operational-part Type	Switch Functions	Current Capacity	Type of Terminals
A	V	L	A	2	5

Operational-part	Symbol
Rocker	L

Current Capacity	Symbol
25A 125/250V AC	0
20A 125/250V AC	1
15A 125/250V AC	2
10A 125/250V AC	3

SwitchFunctions			Symbol	
Left Down	Center	Right Down	SP	DP
ON	-	OFF	A	K
ON	-	ON	D	N

Type of Terminals	Symbol
Quick Connect Terminal #250	5

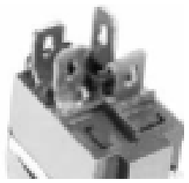

Quick Connect Terminal#250

Silhouette（AVLA05)

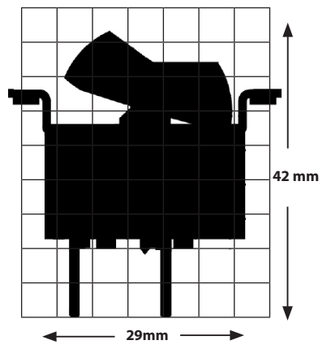

* For products other than those listed above or for custom items, please contact us.

Rocker

AV Series

250V/125VAC
25A
20A
15A
10A

Quick Connect Terminal

SP 2P

Switch Names, Functions, Terminal Diagram

S P

Product Name	Resistive Load AC125/250V DC30V	Product Name	Resistive Load AC125/250V DC30V	Circuit	Functions		
AVLA05	25A	AVLA25	15A	SPST	ON 2-3	—	OFF
AVLD05	25A	AVLD25	15A	SPDT	ON 2-3	—	ON 2-1
AVLA15	20A	AVLA35	10A	SPST	ON 2-3	—	OFF
AVLD15	20A	AVLD35	10A	SPDT	ON 2-3	—	ON 2-1

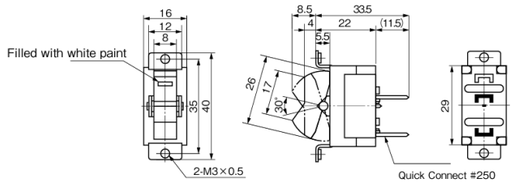

Terminal Diagram

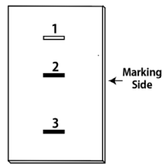

D P

Product Name	Resistive Load AC125/250V DC30V	Product Name	Resistive Load AC125/250V DC30V	Circuit	Functions		
AVLK05	25A	AVLK25	15A	DPST	ON 2-3 5-6	—	OFF
AVLN05	25A	AVLN25	15A	DPDT	ON 2-3 5-6	—	ON 2-1 5-4
AVLK15	20A	AVLK35	10A	DPST	ON 2-3 5-6	—	OFF
AVLN15	20A	AVLN35	10A	DPDT	ON 2-3 5-6	—	ON 2-1 5-4

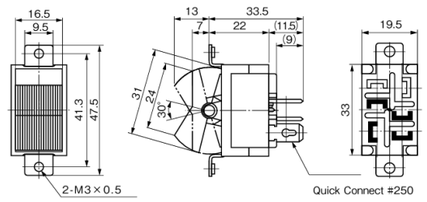

Terminal Diagram

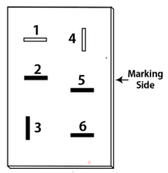

* For products other than those listed above or for custom items, please contact us.

Mounting Hole Dimensions

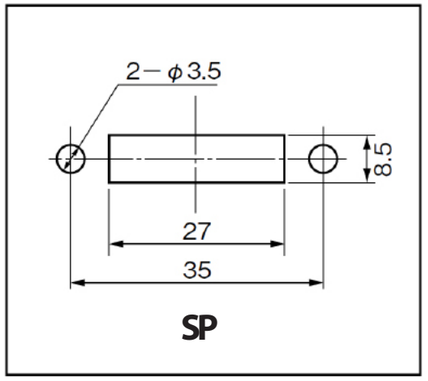

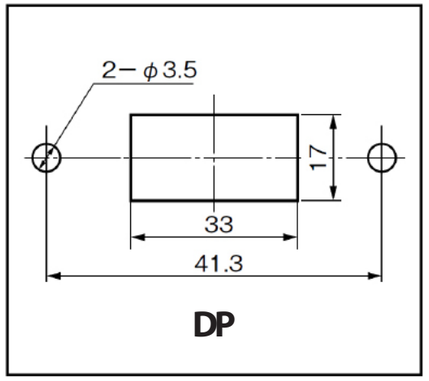

Compliance with the European RoHS Directive

All DIP switches, control switches, connectors, and terminal blocks manufactured by OTAX comply with the following RoHS Directive:
Directive 2011/65/EU of the European Parliament and of the Council on the restriction of the use of certain hazardous substances in electrical and electronic equipment (RoHS).

Our products do not contain any of the ten specified hazardous substances (except for exempted applications):
Lead (Pb), Mercury (Hg),Cadmium (Cd), Hexavalent chromium (Cr^{6+}), Polybrominated biphenyls (PBB), Polybrominated diphenyl ethers (PBDE), Di(2-ethylhexyl) phthalate (DEHP), Butyl benzyl phthalate (BBP), Dibutyl phthalate (DBP), Diisobutyl phthalate (DIBP)

Rocker
AV Series
250V/125VAC
25A
20A
15A
10A
Quick Connect Terminal
SP 2P

* For products other than those listed above or for custom items, please contact us.

Toggle

AW Series

250V/125VAC
25A
20A
15A

Solder Lug
Screw
Quick Connect Terminal

SP 2P

Features of the Series

Unlike conventional splash-proof toggle switches that rely solely on O-rings, the AW series splash-proof toggle switches feature an integrated molding of the bushing and lever using silicone rubber. This design completely seals out water from entering the switch interior through the top panel, even during operation.

Prevents Water Intrusion into the Switch from the Top of the Panel

1. The gap between the knob and the bushing is completely sealed by silicone rubber insert molding.
2. Fixed contacts use a metal insert structure.
3. A fully shielded design is applied between the bushing and the case.

Common Specifications

■ Ratings　□ = Type of Terminals Symbol（1, 2, 4, 5）

Voltage \ Symbol	0 □	1 □	2 □	Load	Notes
AC125/250V	25A	20A	15A	Resistive Load	Load only with Resistive, Power Factor=1
DC30V	25A	20A	15A		

* A resistive load refers to a load consisting solely of resistance. In actual circuits, however, there may be inductive, capacitive, or motor loads, each of which can generate inrush current. Therefore, when selecting a switch, be sure to choose a rating with sufficient margin above the steady-state current.
For more details, please refer to "Useful Advices and Precautions on Usage of Operational Switches."

Packaging Quantity	
SP・DP	100 pcs
3P・4P	50 pcs

Contact Resistance	10 mΩ Max. (DC2V 1A) (Initial value)
Withstanding Voltage	AC1,500V 1 Minute
Insulating Resistance	1,000MΩ Min.　(DC500V)
Electrical Life	20,000 times
Operating Temperature Range	-20℃～ +70℃
Storage Temperature Range	-20℃～ +70℃
Hand-soldering Conditions	350 ± 3℃ within 3 sec.

* For products other than those listed above or for custom items, please contact us.

Product Designations

Series Name		Operational -part Type	Switch Functions	Current Capacity	Type of Terminals
A	W	T	A	2	1

Operational-part	Symbol
Splash-proof Toggle	T

Current Capacity	Symbol
25A 125/250V AC	0
20A 125/250V AC	1
15A 125/250V AC	2

SwitchFunctions			Symbol	
The Opposite Side	Center	Key Thread Side	SP	DP
ON	-	OFF	A	K
ON	-	ON	D	N
ON	OFF	ON	E	P
ON	-	<ON>	F	R
<ON>	OFF	<ON>	G	S
ON	OFF	<ON>	H	T

< > = Momentary

Type of Terminals	Symbol
Solder Lug	1
Screw Terminal	2
Quick Connect Terminal #187	4
Quick Connect Terminal #250	5

Screw Terminal and Quick Connect Terminal # 187 are with 15A, Quick Connect Terminal # 250 with 20,25A only.

■ Examples of Terminal Figures（SP/ DP）

Solder Lug　Screw　Quick Connect #187　Quick Connect #250

SP

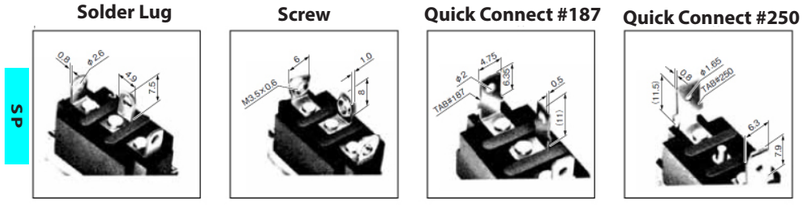

Solder Lug　Screw　Quick Connect #187　Quick Connect #250

DP

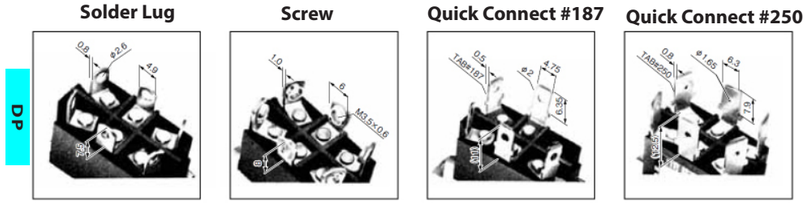

Silhouette（AWTA21）

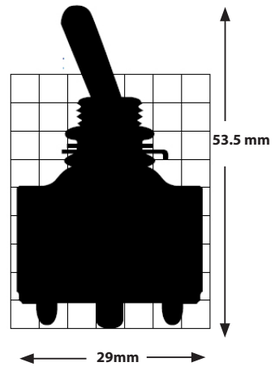

* For products other than those listed above or for custom items, please contact us.

Toggle
AW Series
250V/125VAC
25A
20A
15A
Solder Lug
Screw
Quick Connect Terminal
SP 2P

Toggle

AW Series

250V/125VAC
25A
20A
15A

Solder Lug
Screw
Quick Connect
Terminal

SP 2P

Switch Names, Functions, Terminal Diagram

S P

Product Name	Resistive Load AC125/250V DC30V	Product Name	Resistive Load AC125/250V DC30V	Product Name	Resistive Load AC125/250V DC30V	Circuit	Functions <> = Momentary		
AWTA01	25A	AWTA11	20A	AWTA21	15A	SPST	ON 1-3	—	OFF
AWTD01	25A	AWTD11	20A	AWTD21	15A	SPDT	ON 2-3	—	ON 2-1
AWTE01	25A	AWTE11	20A	AWTE21	15A	SPDT	ON 2-3	OFF	ON 2-1
AWTF01	25A	AWTF11	20A	AWTF21	15A	SPDT	ON 2-3	—	ON 2-1
AWTG01	25A	AWTG11	20A	AWTG21	15A	SPDT	<ON> 2-3	OFF	<ON> 2-1
AWTH01	25A	AWTH11	20A	AWTH21	15A	SPDT	ON 2-3	OFF	<ON> 2-1

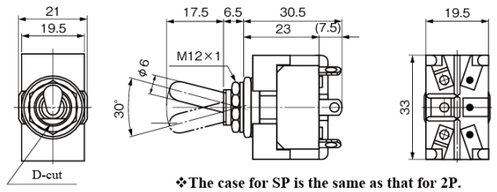

❖The case for SP is the same as that for 2P.

Terminal Diagram

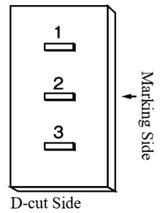

D P

Product Name	Resistive Load AC125/250V DC30V	Product Name	Resistive Load AC125/250V DC30V	Product Name	Resistive Load AC125/250V DC30V	Circuit	Functions <> = Momentary		
AWTK01	25A	AWTK11	20A	AWTK21	15A	2PST	ON 1-3 4-6	—	OFF
AWTN01	25A	AWTN11	20A	AWTN21	15A	2PDT	ON 2-3 5-6	—	ON 2-1 5-4
AWTP01	25A	AWTP11	20A	AWTP21	15A	2PDT	ON 2-3 5-6	OFF	ON 2-1 5-4
AWTR01	25A	AWTR11	20A	AWTR21	15A	2PDT	ON 2-3 5-6	—	ON 2-1 5-4
AWTS01	25A	AWTS11	20A	AWTS21	15A	2PDT	<ON> 2-3 5-6	OFF	<ON> 2-1 5-4
AWTT01	25A	AWTT11	20A	AWTT21	15A	2PDT	ON 2-3 5-6	OFF	<ON> 2-1 5-4

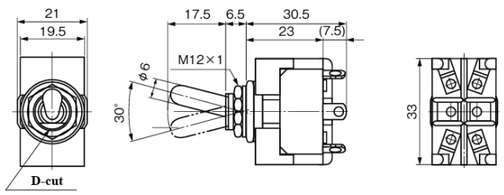

Terminal Diagram

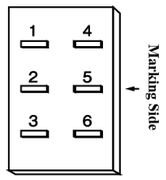

* For products other than those listed above or for custom items, please contact us.

Switch's Structure and Materials

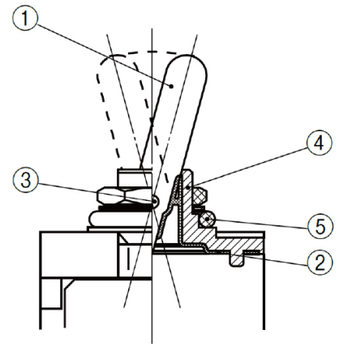

Symbol	Parts Name	Materials
①	Knob	Brass Bar
②	Splash-proof Rubber	Silicone Rubber (white)
③	Shaft	SUS
④	Bushing	Zinc Die-cast
⑤	O-ring	NBR

Dimensions of Terminals, Mounting Holes, and Mounting Parts

Dimensions of Terminals

A W T

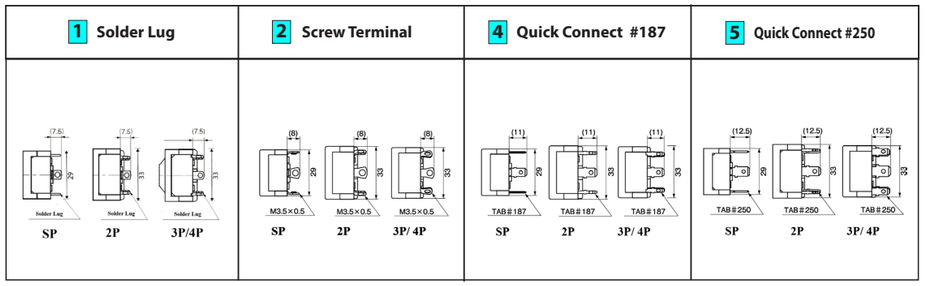

Mounting Hole Dimensions

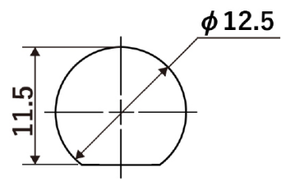

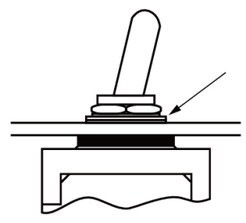

* For splash-proof models, please install the inner-dental washer from the top side of the panel.
The maximum panel thickness is 3.5 mm.

Dimensions of Mounting Parts

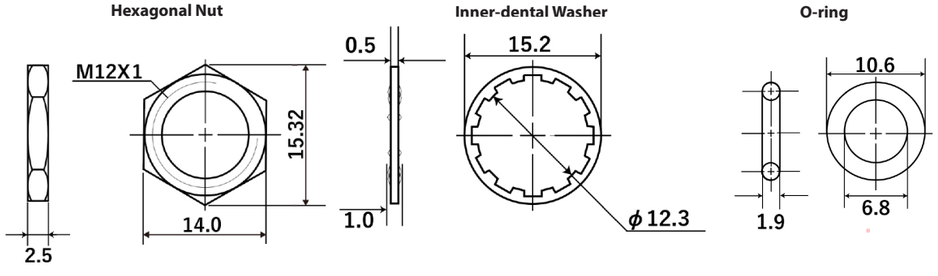

* All Mounting Parts are pre-installed upon delivery.

Toggle

AW Series

250V/125VAC
25A
20A
15A

Solder Lug
Screw
Quick Connect
Terminal

SP 2P

* For products other than those listed above or for custom items, please contact us.

Splash-proof Cap、Other Parts

* The splash-proof type offers splash-proof performance on its own, but using it together with the splash-proof cap shown below can further enhance its splash protection.

Round Splash-proof Cap

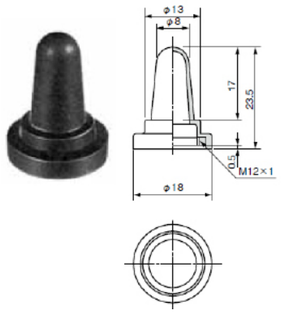

Materials	Color	Part Number
Chloroprene Rubber	Black	6047-1481

Hexagonal Splash-proof Cap

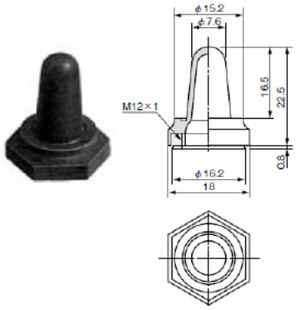

Materials	Color	Part Number
Chloroprene Rubber	Black	6047-0860

Round Dust-tight Cap

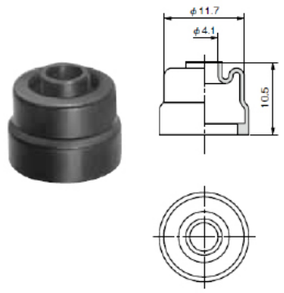

Materials	Color	Part Number
Chloroprene Rubber	Black	7847-8619

This Cap can be directry attached to the Bushing.
(It can be applied to wth M12Hexagonal Nut.)

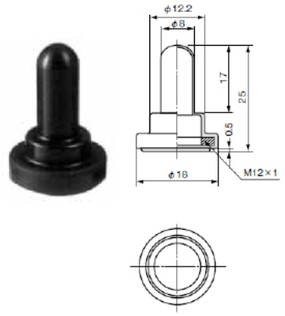

Materials	Color	Part Number
Silicone Rubber	Black	6047-5967
	Red	6047-6414
Chloroprene Rubber	Black	6047-5949
Ethylene-propylene Rubber	Black	6047-6170

Splash-proof Cap・Nut

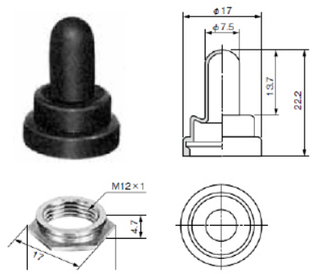

Materials	Color	Part Number
Chloroprene Rubber	Black	6047-2568

Other Parts

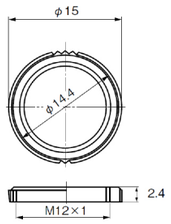

Round Nut

Part Number
9801-0134

ON・OFF Name Plate (Excl. Splash-proof Type)

Colors
Base: Silver
ON: Red
OFF: Black

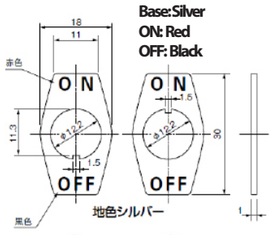

1 2

	Part Number
1	9804-0135
2	9804-1105

* For products other than those listed above or for custom items, please contact us.

Switch Tips

Simultaneous Switching of 2-Pole Power Switch

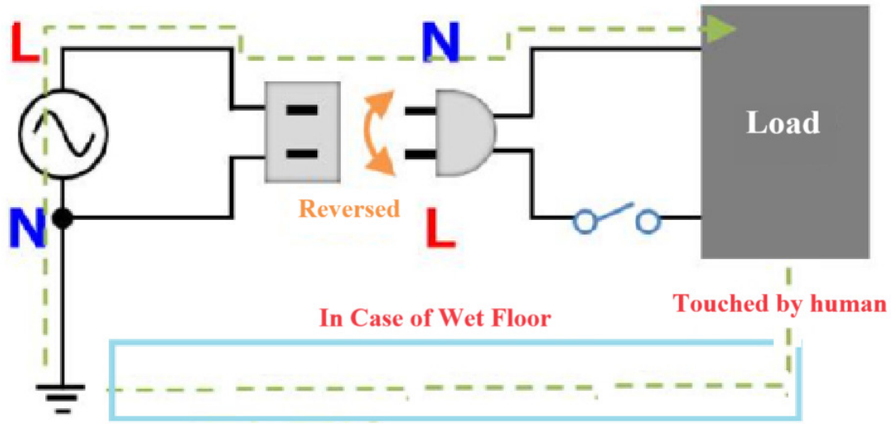

Did you know that even standard 100V AC power plugs have a proper orientation?
In a 100V AC system, one side of the power line is grounded (connected to earth). At the same time, many electronic and electrical devices use their metal chassis as a ground reference.
In such a setup, if the plug is inserted in reverse—as shown in the diagram—and a person touches the chassis while standing on a wet floor, a circuit may be formed, allowing current to flow through the person. This poses a serious risk of electric shock.

To prevent such accidents, we recommend using double-pole switching, where both the live (L) and neutral (N) lines are disconnected simultaneously using a two-pole switch. Standard power switches typically control only the live (L) line, but double-pole switches interrupt both lines at once, completely isolating the device from the power source. This provides a higher level of safety, particularly in environments where the floor may be wet or where high-voltage equipment is in use.

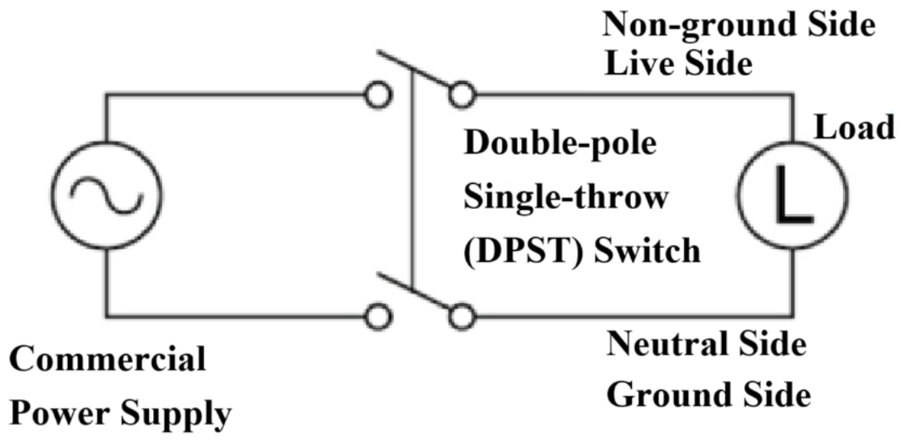

* For products other than those listed above or for custom items, please contact us.

Features of the Series

1. An internal O-ring prevents water from entering the switch.
2. Smaller than the A series, allowing for space-saving installation.
3. The insulating material is UL94 V-0 certified and offers excellent arc resistance, heat resistance, moisture resistance, and impact resistance.

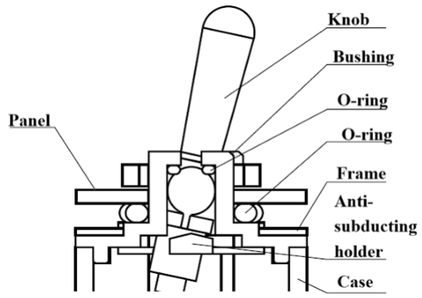

Common Specifications

Ratings

Voltage \ Symbol	01	Load	Notes
AC250V	10A	Resistive Load	Load only with Resistive, Power Factor=1
AC100V	25A		
DC30V	25A		

* A resistive load refers to a load consisting solely of resistance. In actual circuits, however, there may be inductive, capacitive, or motor loads, each of which can generate inrush current. Therefore, when selecting a switch, be sure to choose a rating with sufficient margin above the steady-state current.

For more details, please refer to "Useful Advices and Precautions on Usage of Operational Switches."

Contact Resistance	10 mΩ Max. (DC2V 1A) (Initial value)
Withstanding Voltage	AC1,500V 1 Minute
Insulating Resistance	1,000MΩ Min. (DC500V)
Electrical Life	10,000 times
Operating Temperature Range	-20℃～+70℃
Storage Temperature Range	-20℃～+70℃
Hand-soldering Conditions	350 ± 3℃ within 3 sec.

Packaging Quantity
100 pcs

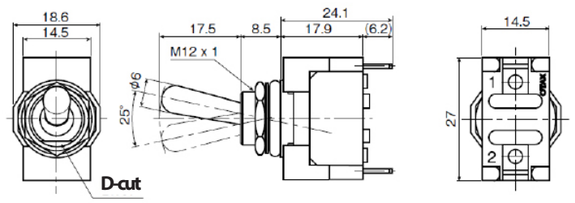

* For products other than those listed above or for custom items, please contact us.

Product Designations

Series Name		Operational-part Type	Switch Functions	Current Capacity	Type of Terminals
A	Y	T	A	0	1

Operational-part	Symbol
Splash-proof Toggle	T

Current Capacity	Symbol
10A 250V AC 25A 125VAC	0

SwitchFunctions			Symbol
The Opposite Side	Center	Key Thread Side	SP
ON	-	OFF	A

Type of Terminals	Symbol
Solder Lug	1

Product Name	Resistive Load AC125/DC30V	Resistive Load AC250V	Circuit	Functions		
AYTA01	25A	10A	SPST	ON	—	OFF

Terminal Diagram

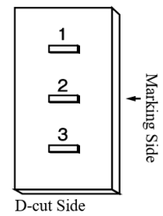

Mounting Hole Dimensions

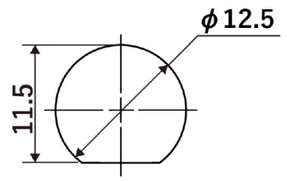

Dimensions of Mounting Parts

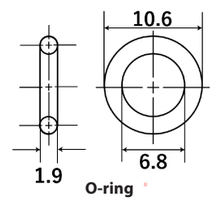

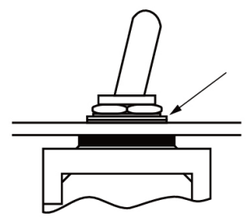

* For splash-proof models, please install the inner-dental washer from the top side of the panel.
The maximum panel thickness is 3.5 mm.

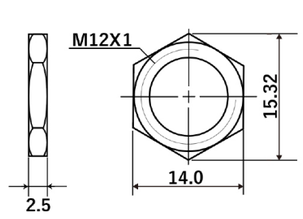

Hexagonal Nut

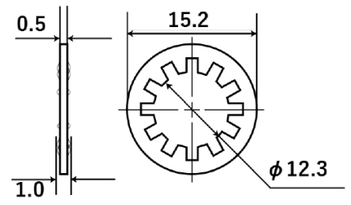

Inner-dental Washer

Silhouette（AYTA01）

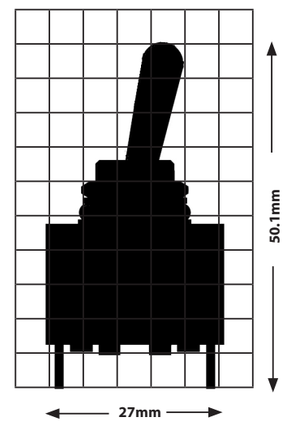

* For products other than those listed above or for custom items, please contact us.

Toggle
AY Series
250VAC/10A
125VAC/25A
Solder Lug
SP

Toggle

B Series

250V/125VAC
10A
6A

Solder Lug
Quick Connect
Terminal

SP 2P

Outline of the Series

This series offers a compact design with ratings up to 10A, all at an affordable price. Available types include toggle, rocker, push-button, and slide switches.

Features of the Series

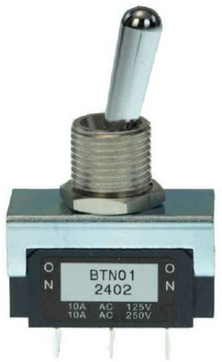

1. All standard models use UL94 V-1 certified flame-retardant resin for the case material.
2. The contact structure is designed to minimize bounce, ensuring stable opening and closing.
3. Despite being rated for 10A, all models are compact and cost-effective (compared to our conventional products), while maintaining high performance.
4. Terminal sealing prevents flux from entering the case during soldering.
5. An integrated terminal-contact clinch structure is adopted, ensuring that even if the case becomes deformed due to soldering heat, no electrical failure will occur.

Common Specifications

■ Ratings □ = Type of Terminals Symbol

Voltage \ Symbol	0 □	1 □	Load	Notes
AC125/250V	10A	6A	Resistive Load	Load only with Resistive, Power Factor=1
DC30V	10A	6A		

* A resistive load refers to a load consisting solely of resistance. In actual circuits, however, there may be inductive, capacitive, or motor loads, each of which can generate inrush current. Therefore, when selecting a switch, be sure to choose a rating with sufficient margin above the steady-state current.

For more details, please refer to "Useful Advices and Precautions on Usage of Operational Switches."

Contact Resistance	10 mΩ Max. (DC2V 1A) (Initial value)
Withstanding Voltage	AC1,500V 1 Minute
Insulating Resistance	1,000MΩ Min. (DC500V)
Electrical Life	10,000 times
Operating Temperature Range	-20℃～ +70℃
Storage Temperature Range	-20℃～ +70℃
Hand-soldering Conditions	350 ± 3℃ within 3 sec.

Packaging Quantity
100 pcs

* For products other than those listed above or for custom items, please contact us.

Product Designations

Series Name	Operational-part Type	Switch Functions	Current Capacity	Type of Terminals
B	T	A	0	1

Operational-part	Symbol
Toggle	T

Current Capacity	Symbol
10A 125/250V AC	0
6A 125/250V AC	1

SwitchFunctions			Symbol	
The Opposite Side	Center	Key Thread Side	SP	DP
ON	-	OFF	A	K
ON	-	ON	D	N
ON	OFF	ON	E	P
ON	-	<ON>	F	R
<ON>	OFF	<ON>	G	S

< > = Momentary

Type of Terminals	Symbol
Solder Lug	1
Quick Connect Terminal #110	3

■ Examples of Terminal Figures（SP、ON-ON、ON-OFF）

Silhouette（BTD01）

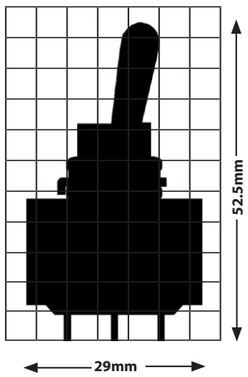

Solder Lug(ON-ON)

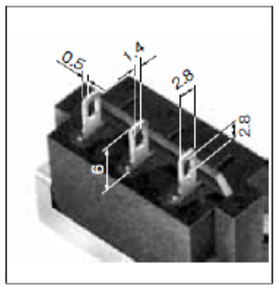

Quick Connect #110 (ON-OFF)

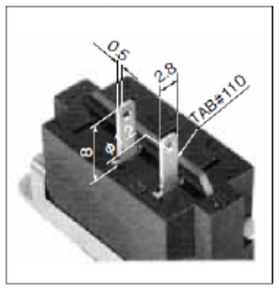

* For products other than those listed above or for custom items, please contact us.

Toggle
B Series
250V/125VAC
10A
6A
Solder Lug
Quick Connect
Terminal
SP 2P

Switch Names, Functions, Terminal Diagram

S P

Product Name	Resistive Load AC125/250V DC30V	Product Name	Resistive Load AC125/250V DC30V	Circuit	Functions <> はMomentary		
BTA01	10A	BTA11	6A	SPST	ON 2-3	—	OFF
BTD01	10A	BTD11	6A	SPDT	ON 2-3	—	ON 2-1
BTE01	10A	BTE11	6A	SPDT	ON 2-3	OFF	ON 2-1
BTF01	10A	BTF11	6A	SPDT	ON 2-3	—	‹ON› 2-1
BTG01	10A	BTG11	6A	SPDT	‹ON› 2-3	OFF	‹ON› 2-1

Terminal Diagram

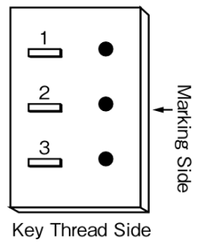

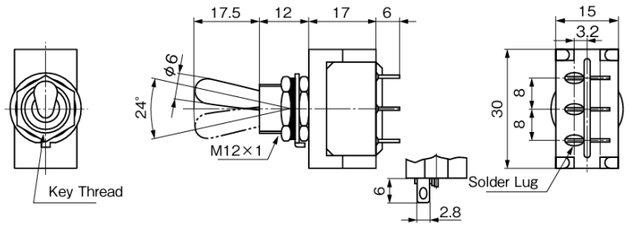

D P

Product Name	Resistive Load AC125/250V DC30V	Product Name	Resistive Load AC125/250V DC30V	Circuit	Functions <> はMomentary		
BTK01	10A	BTK11	6A	DPST	ON 2-3 5-6	—	OFF
BTN01	10A	BTN11	6A	DPDT	ON 2-3 5-6	—	ON 2-1 5-4
BTP01	10A	BTP11	6A	DPDT	ON 2-3 5-6	OFF	ON 2-1 5-4
BTR01	10A	BTR11	6A	DPDT	ON 2-3 5-6	—	‹ON› 2-1 5-4
BTS01	10A	BTS11	6A	DPDT	‹ON› 2-3 5-6	OFF	‹ON› 2-1 5-4

Terminal Diagram

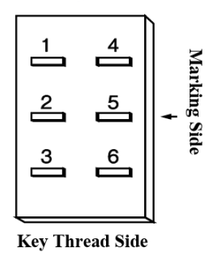

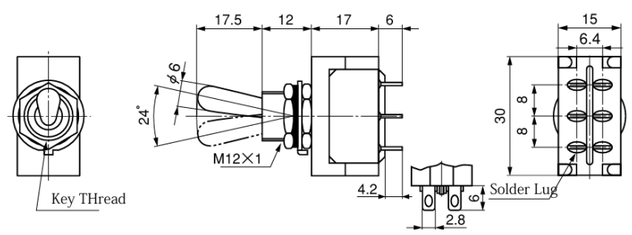

* For products other than those listed above or for custom items, please contact us.

Mounting Hole Dimensions, Mounting Parts Dimentions

Mounting Hole Dimensions

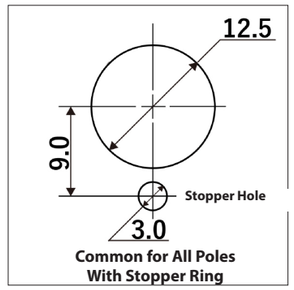

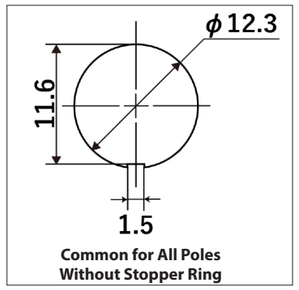

Mounting Parts Dimensitions

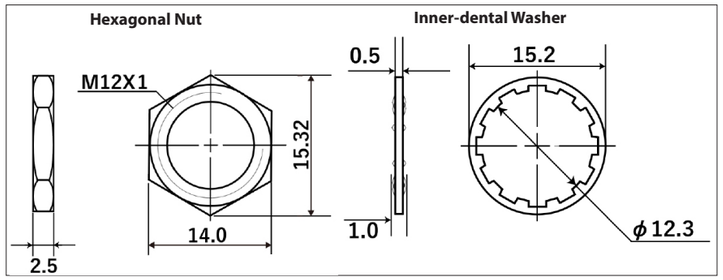

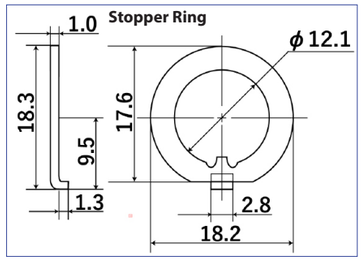

* Regarding the mounting parts, only the lower nut is pre-installed on the main unit; other parts are included separately.

* For products other than those listed above or for custom items, please contact us.

Toggle
B Series
250V/125VAC 10A 6A
Solder Lug Quick Connect Terminal
SP 2P

Splash-proof Cap, Other Parts

Round Splash-proof Cap

Materials	Color	Part Number
Chloroprene Rubber	Black	6047-1481

Hexagonal Splash-proof Cap

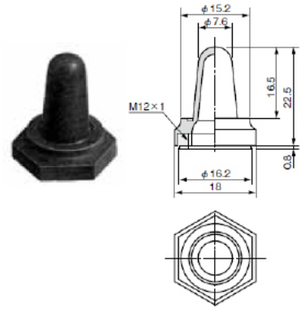

Materials	Color	Part Number
Chloroprene Rubber	Black	6047-0860

ON・OFF Name Plate

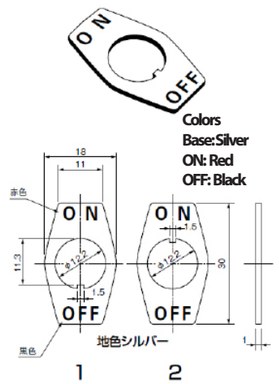

	Part Number
1	9804-0135
2	9804-1105

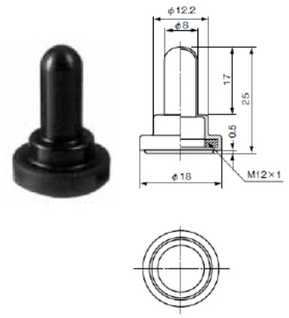

Materials	Color	Part Number
Silicone Rubber	Black	6047-5967
	Red	6047-6414
Chloroprene Rubber	Black	6047-5949
Ethylene-propylene Rubber	Black	6047-6170

Round Dust-tight Cap

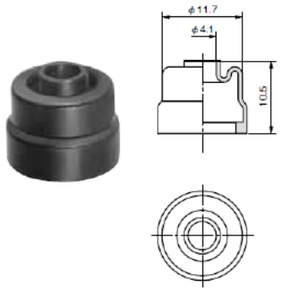

Materials	Color	Part Number
Chloroprene Rubber	Black	7847-8619

This Cap can be directry attached to the Bushing.
(It can be applied to wth M12Hexagonal Nut.)

Compliance with the European RoHS Directive

All DIP switches, control switches, connectors, and terminal blocks manufactured by OTAX with the following RoHS Directive:

Directive 2011/65/EU of the European Parliament and of the Council on the restriction of the use of certain hazardous substances in electrical and electronic equipment (RoHS).

Our products do not contain any of the ten specified hazardous substances (except for exempted applications):

Lead (Pb) Mercury (Hg) Cadmium (Cd) Hexavalent chromium (Cr^{6+}) Polybrominated biphenyls (PBB) Polybrominated diphenyl ethers (PBDE) Di(2-ethylhexyl) phthalate (DEHP) Butyl benzyl phthalate (BBP) Dibutyl phthalate (DBP) Diisobutyl phthalate (DIBP)

* For products other than those listed above or for custom items, please contact us.

Switch Tips

Simultaneous Switching of 2-Pole Power Switch

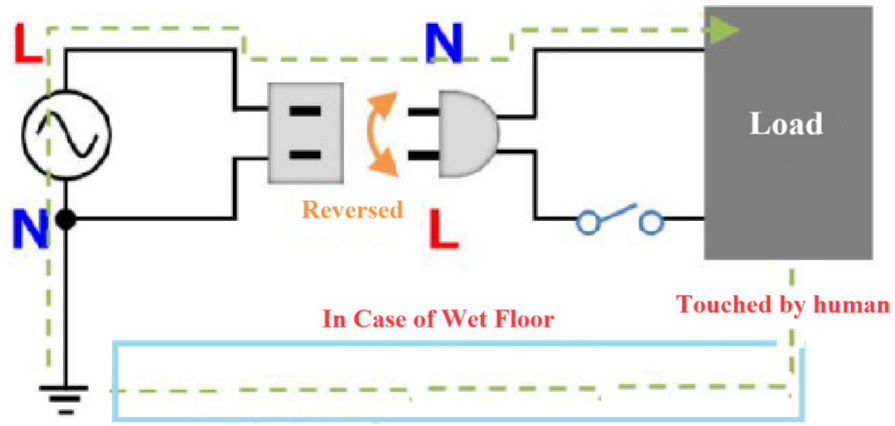

Did you know that even standard 100V AC power plugs have a proper orientation?
In a 100V AC system, one side of the power line is grounded (connected to earth). At the same time, many electronic and electrical devices use their metal chassis as a ground reference.
In such a setup, if the plug is inserted in reverse—as shown in the diagram—and a person touches the chassis while standing on a wet floor, a circuit may be formed, allowing current to flow through the person. This poses a serious risk of electric shock.

To prevent such accidents, we recommend using double-pole switching, where both the live (L) and neutral (N) lines are disconnected simultaneously using a two-pole switch. Standard power switches typically control only the live (L) line, but double-pole switches interrupt both lines at once, completely isolating the device from the power source. This provides a higher level of safety, particularly in environments where the floor may be wet or where high-voltage equipment is in use.

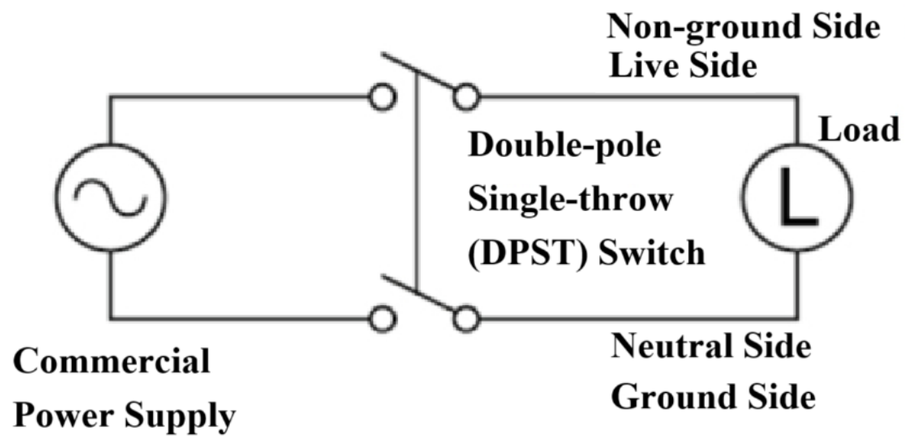

* For products other than those listed above or for custom items, please contact us.

Rocker

B
Series

250V/125VAC
10A
6A

Solder Lug
Quick Connect
Terminal

SP DP

Outline of the Series

This series offers a compact design with ratings up to 10A, all at an affordable price. Available types include toggle, rocker, push-button, and slide switches.

Features of the Series

1. All standard models use UL94 V-1 certified flame-retardant resin for the case material.
2. The contact structure is designed to minimize bounce, ensuring stable opening and closing.
3. Despite being rated for 10A, all models are compact and cost-effective (compared to our conventional products), while maintaining high performance.
4. Terminal sealing prevents flux from entering the case during soldering.
5. An integrated terminal-contact clinch structure is adopted, ensuring that even if the case becomes deformed due to soldering heat, no electrical failure will occur.

Common Specifications

■ Ratings □ = Type of Terminals Symbol

Voltage \ Symbol	0 □	1 □	Load	Notes
AC125/250V	10A	6A	Resistive Load	Load only with Resistive, Power Factor=1
DC30V	10A	6A		

* A resistive load refers to a load consisting solely of resistance. In actual circuits, however, there may be inductive, capacitive, or motor loads, each of which can generate inrush current. Therefore, when selecting a switch, be sure to choose a rating with sufficient margin above the steady-state current.

For more details, please refer to "Useful Advices and Precautions on Usage of Operational Switches."

Contact Resistance	10 mΩ Max. (DC2V 1A) (Initial value)
Withstanding Voltage	AC1,500V 1 Minute
Insulating Resistance	1,000MΩ Min. (DC500V)
Electrical Life	10,000 times
Operating Temperature Range	-20℃～+70℃
Storage Temperature Range	-20℃～+70℃
Hand-soldering Conditions	350 ± 3℃ within 3 sec.

Packaging Quantity
100 pcs

* For products other than those listed above or for custom items, please contact us.

Product Designations

Series Name	Operational-part Type	Switch Functions	Current Capacity	Type of Terminals
B	L	A	0	1

Operational-part	Symbol
Rocker	L

Current Capacity	Symbol
10A 125/250V AC	0
6A 125/250V AC	1

SwitchFunctions			Symbol	
Left Down	Center	Right Down	SP	DP
ON	-	OFF	A	K
ON	-	ON	D	N
ON	OFF	ON	E	P
ON	-	<ON>	F	R
<ON>	OFF	<ON>	G	S

< > = Momentary

Type of Terminals	Symbol
Solder Lug	1
Quick Connect Terminal #110	3

Silhouette（BLD01）

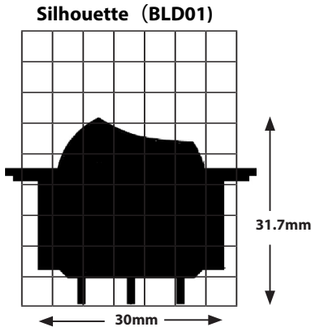

Solder Lug

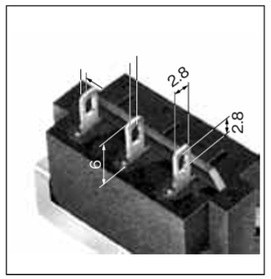

Quick Connect #110

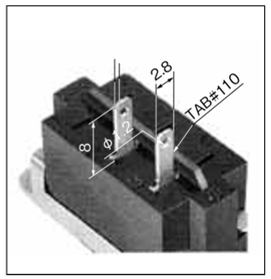

* For products other than those listed above or for custom items, please contact us.

Rocker
B
Series
250V/125VAC
10A
6A
Solder Lug
Quick Connect
Terminal
SP DP

Switch Names, Functions, Terminal Diagram

S P

Product Name	Resistive Load AC125/250V DC30V	Product Name	Resistive Load AC125/250V DC30V	Circuit	Functions <> = Momentary		
BLA01	10A	BLA11	6A	SPST	ON 2-3	—	OFF
BLD01	10A	BLD11	6A	SPDT	ON 2-3	—	ON 2-1
BLE01	10A	BLE11	6A	SPDT	ON 2-3	OFF	ON 2-1
BLF01	10A	BLF11	6A	SPDT	ON 2-3	—	<ON> 2-1
BLG01	10A	BLG11	6A	SPDT	<ON> 2-3	OFF	<ON> 2-1

Terminal Diagram

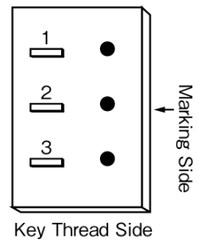

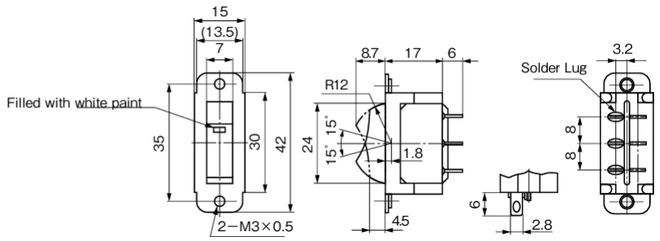

D P

Product Name	Resistive Load AC125/250V DC30V	Product Name	Resistive Load AC125/250V DC30V	Circuit	Functions <> = Momentary		
BLK01	10A	BLK11	6A	DPST	ON 2-3 5-6	—	OFF
BLN01	10A	BLN11	6A	DPDT	ON 2-3 5-6	—	ON 2-1 5-4
BLP01	10A	BLP11	6A	DPDT	ON 2-3 5-6	OFF	ON 2-1 5-4
BLR01	10A	BLR11	6A	DPDT	ON 2-3 5-6	—	<ON> 2-1 5-4
BLS01	10A	BLS11	6A	DPDT	<ON> 2-3 5-6	OFF	<ON> 2-1 5-4

Terminal Diagram

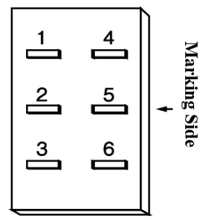

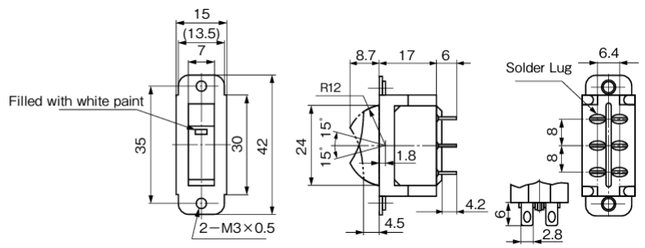

Mounting Hole Dimensions

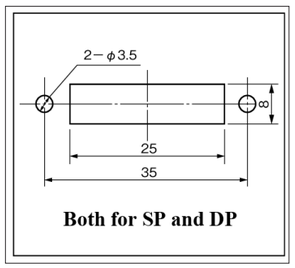

* For products other than those listed above or for custom items, please contact us.

Compliance with the European RoHS Directive

All DIP switches, control switches, connectors, and terminal blocks manufactured by OTAX with the following RoHS Directive:

Directive 2011/65/EU of the European Parliament and of the Council on the restriction of the use of certain hazardous substances in electrical and electronic equipment (RoHS).

Our products do not contain any of the ten specified hazardous substances (except for exempted applications):

Lead (Pb) Mercury (Hg) Cadmium (Cd) Hexavalent chromium (Cr^{6+}) Polybrominated biphenyls (PBB) Polybrominated diphenyl ethers (PBDE) Di(2-ethylhexyl) phthalate (DEHP) Butyl benzyl phthalate (BBP) Dibutyl phthalate (DBP) Diisobutyl phthalate (DIBP)

Rocker
B Series
250V/125VAC 10A 6A
Solder Lug Quick Connect Terminal
SP DP

* For products other than those listed above or for custom items, please contact us.

Pushbutton

B Series

250V/125VAC
10A
6A

Solder Lug
Quick Connect
Terminal

SP 2P

Outline of the Series

This series offers a compact design with ratings up to 10A, all at an affordable price. Available types include toggle, rocker, push-button, and slide switches.

Features of the Series

1. All standard models use UL94 V-1 certified flame-retardant resin for the case material.
2. The contact structure is designed to minimize bounce, ensuring stable opening and closing.
3. Despite being rated for 10A, all models are compact and cost-effective (compared to our conventional products), while maintaining high performance.
4. Terminal sealing prevents flux from entering the case during soldering.
5. An integrated terminal-contact clinch structure is adopted, ensuring that even if the case becomes deformed due to soldering heat, no electrical failure will occur.

Common Specifications

■ Ratings　□ = Type of Terminals Symbol

Voltage \ Symbol	0 □	1 □	Load	Notes
AC125/250V	10A	6A	Resistive Load	Load only with Resistive, Power Factor=1
DC30V	10A	6A		

* A resistive load refers to a load consisting solely of resistance. In actual circuits, however, there may be inductive, capacitive, or motor loads, each of which can generate inrush current. Therefore, when selecting a switch, be sure to choose a rating with sufficient margin above the steady-state current.

For more details, please refer to "Useful Advices and Precautions on Usage of Operational Switches."

Contact Resistance	10 mΩ Max. (DC2V 1A) (Initial value)
Withstanding Voltage	AC1,500V 1 Minute
Insulating Resistance	1,000MΩ Min. (DC500V)
Electrical Life	10,000 times
Operating Temperature Range	-20℃～ +70℃
Storage Temperature Range	-20℃～ +70℃
Hand-soldering Conditions	350 ± 3℃ within 3 sec.

Packaging Quantity
100 pcs

* For products other than those listed above or for custom items, please contact us.

Product Designations

Series Name	Operational-part Type	Switch Functions	Current Capacity	Type of Terminals
B	P	A	0	1

Operational-part	Symbol
One-pushbutton	P
Two-pushbutton	B

Current Capacity	Symbol
10A 125/250V AC	0
6A 125/250V AC	1

SwitchFunctions			Symbol	
The Initial Status	When the Button is pushed	When the Button is pushed	SP	DP
ON	-	OFF	A	K
ON	-	ON	D	N
ON	OFF	ON*	E	P
ON	-	<ON>	F	R

< > = Momentary
* = When the Button is pushed twice

※Switch Functions F and R are for One-pushbutton only, while E and P are for Two-pushbutton only.。

Type of Terminals	Symbol
Solder Lug	1
Quick Connect Terminal #110	3

Silhouette（BPD01）

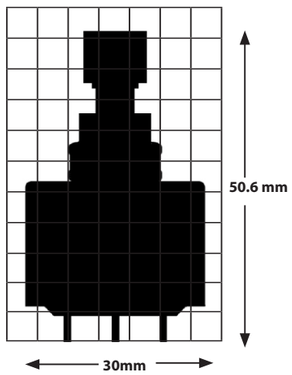

■ Examples of Terminal Figures（SP, ON-ON, ON-OFF）

Solder Lug(ON-ON)

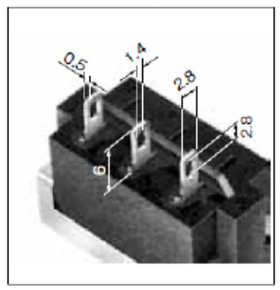

Quick Connect #110
(ON-OFF)

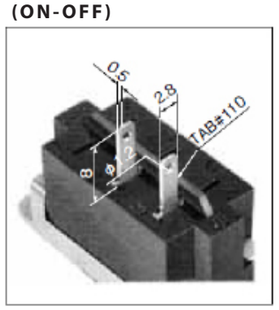

* For products other than those listed above or for custom items, please contact us.

Pushbutton
B Series
250V/125VAC
10A
6A
Solder Lug
Quick Connect
Terminal
SP 2P

Switch Names, Functions, Terminal Diagram

S P

Product Name	Resistive Load AC125/250V DC30V	Product Name	Resistive Load AC125/250V DC30V	Circuit	Functions <> = Momentary / Alternate		
BPA01	10A	BPA11	6A	SPST	ON 2-3	—	OFF
BPD01	10A	BPD11	6A	SPDT	ON 2-3	—	ON 2-1

Product Name		Product Name		Circuit	Initial Position	When the Button is pushed
BPF01	10A	BPF11	6A	SPDT	ON 2-3	‹ON› 2-1

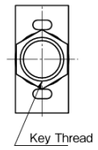

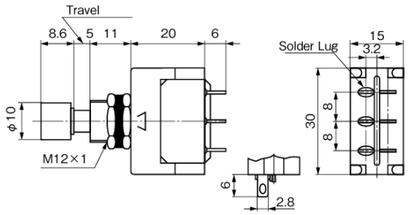

Terminal Diagram

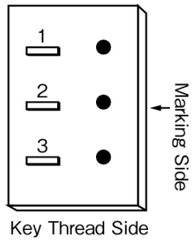

D P

Product Name	Resistive Load AC125/250V DC30V	Product Name	Resistive Load AC125/250V DC30V	Circuit	Functions <> = Momentary / Alternate		
BPK01	10A	BPK11	6A	DPST	ON 2-3 5-6	—	OFF
BPN01	10A	BPN11	6A	DPDT	ON 2-3 5-6	—	ON 2-1 5-4

Product Name		Product Name		Circuit	Initial Position	When the Button is pushed
BPR01	10A	BPR11	6A	DPDT	ON 2-3 5-6	‹ON› 2-1 5-4

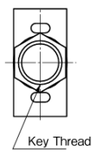

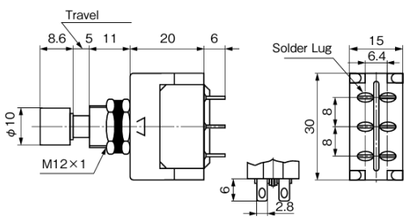

Terminal Diagram

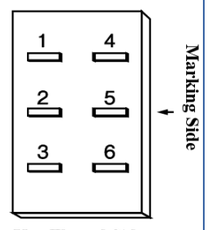

BPF □ □
BPR □ □
The position of the plunger is off-center for these types.

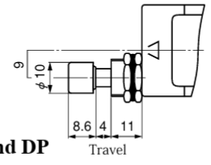

The position of the plunger is on the terminal No.3/6 side.

Both for SP and DP

* For products other than those listed above or for custom items, please contact us.

S P

Product Name	Resistive Load AC125/250V DC30V	Product Name	Resistive Load AC125/250V DC30V	Circuit	Functions <> = Momentary		
BBA01	10A	BBA11	6A	SPST	ON 2-3	—	OFF
BBD01	10A	BBD11	6A	SPDT	ON 2-3	—	ON 2-1
BBE01	10A	BBE11	6A	SPDT	ON 2-3	OFF	‹ON 2-1

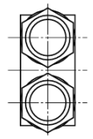

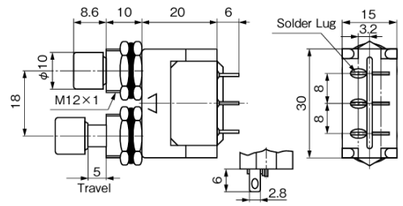

Terminal Diagram

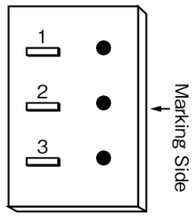

D P

Product Name	Resistive Load AC125/250V DC30V	Product Name	Resistive Load AC125/250V DC30V	Circuit	Functions <> = Momentary		
BBK01	10A	BBK11	6A	DPST	ON 2-3 5-6	—	OFF
BBN01	10A	BBN11	6A	DPDT	ON 2-3 5-6	—	ON 2-1 5-4
BBP01	10A	BBP11	6A	DPDT	ON 2-3 5-6	OFF	ON 2-1 5-4

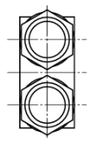

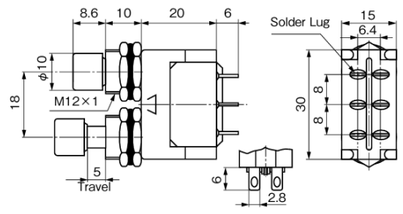

Terminal Diagram

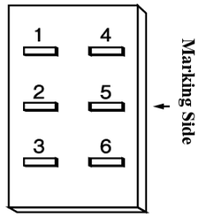

* For products other than those listed above or for custom items, please contact us.

Mounting Hole Dimensions, Mounting Parts Dimentions

Mounting Hole Dimensions

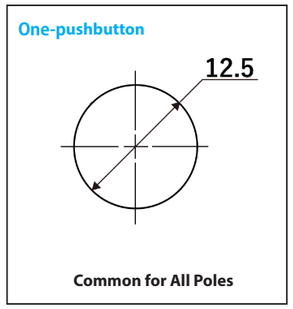

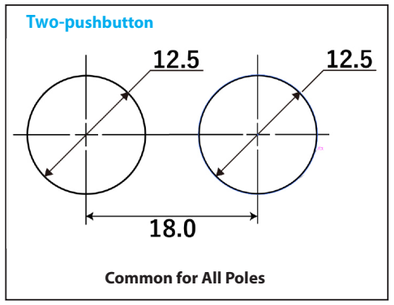

Mounting Parts Dimensions

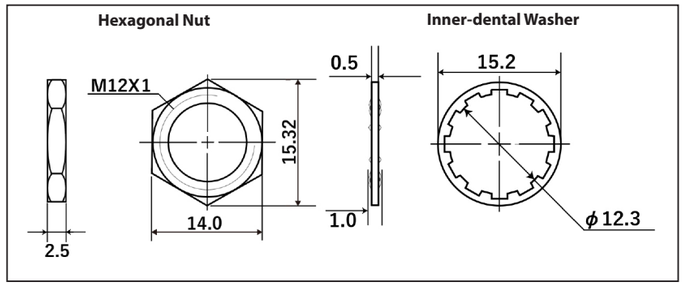

* Regarding the mounting parts, only the lower nut is pre-installed on the main unit; other parts are included separately.

Compliance with the European RoHS Directive

All DIP switches, control switches, connectors, and terminal blocks manufactured by OTAX with the following RoHS Directive:

Directive 2011/65/EU of the European Parliament and of the Council on the restriction of the use of certain hazardous substances in electrical and electronic equipment (RoHS).

Our products do not contain any of the ten specified hazardous substances (except for exempted applications):

Lead (Pb) Mercury (Hg) Cadmium (Cd) Hexavalent chromium (Cr^{6+}) Polybrominated biphenyls (PBB) Polybrominated diphenyl ethers (PBDE) Di(2-ethylhexyl) phthalate (DEHP) Butyl benzyl phthalate (BBP) Dibutyl phthalate (DBP) Diisobutyl phthalate (DIBP)

* For products other than those listed above or for custom items, please contact us.

Switch Tips

Simultaneous Switching of 2-Pole Power Switch

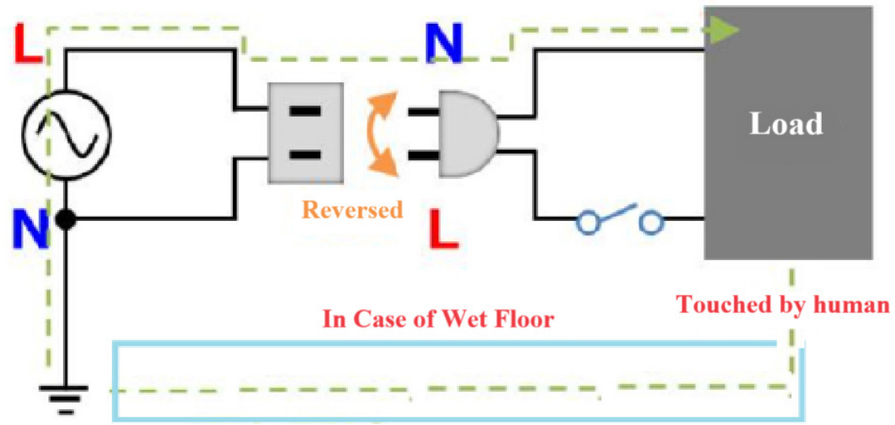

Did you know that even standard 100V AC power plugs have a proper orientation?
In a 100V AC system, one side of the power line is grounded (connected to earth). At the same time, many electronic and electrical devices use their metal chassis as a ground reference.
In such a setup, if the plug is inserted in reverse—as shown in the diagram—and a person touches the chassis while standing on a wet floor, a circuit may be formed, allowing current to flow through the person. This poses a serious risk of electric shock.

To prevent such accidents, we recommend using double-pole switching, where both the live (L) and neutral (N) lines are disconnected simultaneously using a two-pole switch. Standard power switches typically control only the live (L) line, but double-pole switches interrupt both lines at once, completely isolating the device from the power source. This provides a higher level of safety, particularly in environments where the floor may be wet or where high-voltage equipment is in use.

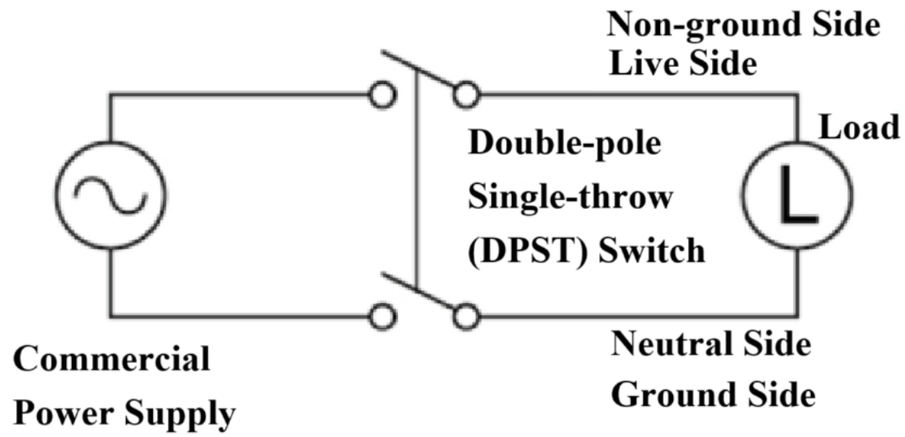

* For products other than those listed above or for custom items, please contact us.

Pushbutton
B Series
250V/125VAC 10A 6A
Solder Lug Quick Connect Terminal
SP 2P

Slide

B
Series

250V/125VAC
10A
6A

Solder Lug
Quick Connect
Terminal

SP 2P

Outline of the Series

This series offers a compact design with ratings up to 10A, all at an affordable price. Available types include toggle, rocker, push-button, and slide switches.

Features of the Series

1. All standard models use UL94 V-1 certified flame-retardant resin for the case material.
2. The contact structure is designed to minimize bounce, ensuring stable opening and closing.
3. Despite being rated for 10A, all models are compact and cost-effective (compared to our conventional products), while maintaining high performance.
4. Terminal sealing prevents flux from entering the case during soldering.
5. An integrated terminal-contact clinch structure is adopted, ensuring that even if the case becomes deformed due to soldering heat, no electrical failure will occur.

Common Specifications

■ Ratings　□ = Type of Terminals Symbol

Voltage \ Symbol	0 □	1 □	Load	Notes
AC125/250V	10A	6A	Resistive Load	Load only with Resistive, Power Factor=1
DC30V	10A	6A		

* A resistive load refers to a load consisting solely of resistance. In actual circuits, however, there may be inductive, capacitive, or motor loads, each of which can generate inrush current. Therefore, when selecting a switch, be sure to choose a rating with sufficient margin above the steady-state current.

For more details, please refer to "Useful Advices and Precautions on Usage of Operational Switches."

Contact Resistance	10 mΩ Max. (DC2V 1A) (Initial value)
Withstanding Voltage	AC1,500V 1 Minute
Insulating Resistance	1,000MΩ Min. (DC500V)
Electrical Life	10,000 times
Operating Temperature Range	-20℃～ +70℃
Storage Temperature Range	-20℃～ +70℃
Hand-soldering Conditions	350 ± 3℃ within 3 sec.

Packaging Quantity
100 pcs

* For products other than those listed above or for custom items, please contact us.

Product Designations

Series Name	Operational-part Type	Switch Functions	Current Capacity	Type of Terminals
B	S	A	0	1

Operational-part	Symbol
Slide	S

Current Capacity	Symbol
10A 125/250V AC	0
6A 125/250V AC	1

SwitchFunctions			Symbol	
Left (seen from front)	Center	Right (seen from front)	SP	DP
ON	-	OFF	A	K
ON	-	ON	D	N
ON	OFF	ON	E	P

Type of Terminals	Symbol
Solder Lug	1
Quick Connect Terminal #110	3

■ Examples of Terminal Figures（SP, ON-ON, ON-OFF）

Silhouette（BSD01）

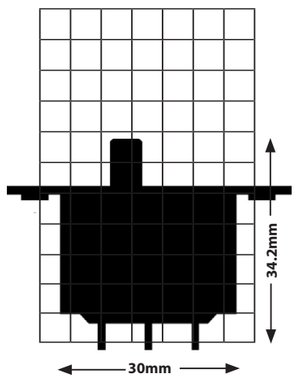

Solder Lug（ON-ON）

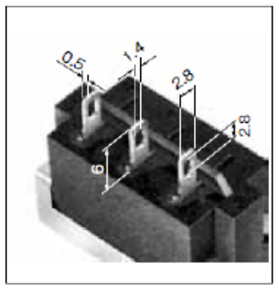

Quick Connect erminal#110
(ON-OFF)

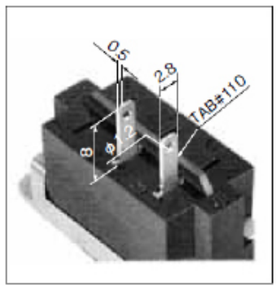

* For products other than those listed above or for custom items, please contact us.

Slide
B
Series
250V/125VAC
10A
6A
Solder Lug
Quick Connect
Terminal
SP 2P

Switch Names, Functions, Terminal Diagram

S P

Product Name	Resistive Load AC125/250V DC30V	Product Name	Resistive Load AC125/250V DC30V	Circuit	Functions <> = Momentary		
BSA01	10A	BSA11	6A	SPST	OFF	—	ON 2-3
BSD01	10A	BSD11	6A	SPDT	ON 2-1	—	ON 2-3
BSE01	10A	BSE11	6A	SPDT	ON 2-1	OFF	ON 2-3

Terminal Diagram

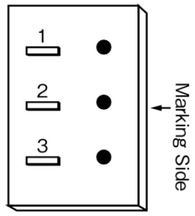

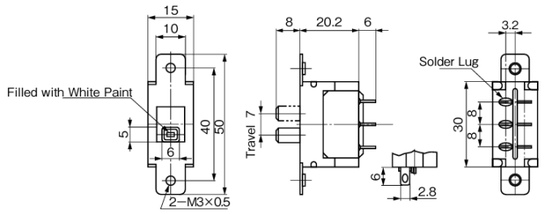

❖ Utilizing the single side of the case for DP

D P

Product Name	Resistive Load AC125/250V DC30V	Product Name	Resistive Load AC125/250V DC30V	Circuit	Functions <> = Momentary		
BSK01	10A	BSK11	6A	DPST	OFF	—	ON 2-3 5-6
BSN01	10A	BSN11	6A	DPDT	ON 2-1 5-4	—	ON 2-3 5-6
BSP01	10A	BSP11	6A	DPDT	ON 2-1 5-4	OFF	ON 2-3 5-6

Terminal Diagram

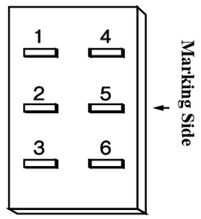

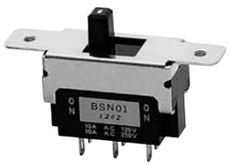

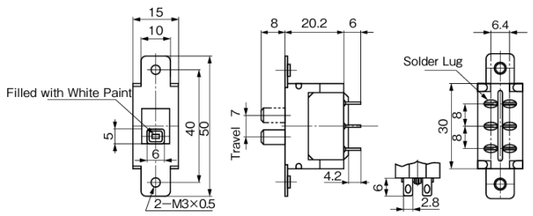

Mounting Hole Dimensions

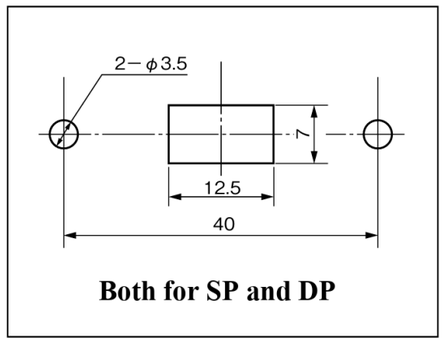

* For products other than those listed above or for custom items, please contact us.

Compliance with the European RoHS Directive

All DIP switches, control switches, connectors, and terminal blocks manufactured by OTAX with the following RoHS Directive:

Directive 2011/65/EU of the European Parliament and of the Council on the restriction of the use of certain hazardous substances in electrical and electronic equipment (RoHS).

Our products do not contain any of the ten specified hazardous substances (except for exempted applications):

Lead (Pb) Mercury (Hg) Cadmium (Cd) Hexavalent chromium (Cr^{6+}) Polybrominated biphenyls (PBB) Polybrominated diphenyl ethers (PBDE) Di(2-ethylhexyl) phthalate (DEHP) Butyl benzyl phthalate (BBP) Dibutyl phthalate (DBP) Diisobutyl phthalate (DIBP)

Slide
B Series
250V/125VAC 10A 6A
Solder Lug Quick Connect Terminal
SP 2P

* For products other than those listed above or for custom items, please contact us.

Toggle

C Series

250V/125VAC
6A
3A

Solder Lug

SP 2P

Outline of the Series

This is a compact switch series rated up to 6A, designed to minimize the height below the panel to as little as 16 mm (for single-pole types), while offering an affordable price. Available types include toggle, rocker, and slide switches.

Features of the Series

1. All standard models use UL94 V-1 certified flame-retardant resin for the case material.
2. The contact structure is designed to minimize bounce, ensuring stable switching performance.
3. All models achieve high performance in a compact and cost-effective design (compared to our conventional products), despite being rated for 6A.

Common Specifications

■ Ratings

Voltage \ Symbol	01	11	Load	Notes
AC125/250V	6A	3A	Resistive Load	Load only with Resistive, Power Factor=1
DC30V	6A	3A		

* A resistive load refers to a load consisting solely of resistance. In actual circuits, however, there may be inductive, capacitive, or motor loads, each of which can generate inrush current. Therefore, when selecting a switch, be sure to choose a rating with sufficient margin above the steady-state current.

For more details, please refer to "Useful Advices and Precautions on Usage of Operational Switches."

Contact Resistance	20 mΩ Max. (DC2V 1A) (Initial value)
Withstanding Voltage	AC1,500V 1 Minute
Insulating Resistance	1,000MΩ Min. (DC500V)
Electrical Life	10,000 times
Operating Temperature Range	-20℃～ +70℃
Storage Temperature Range	-20℃～ +70℃
Hand-soldering Conditions	350 ± 3℃ within 3 sec.

Packaging Quantity	
SP	200 pcs
DP	100 pcs

* For products other than those listed above or for custom items, please contact us.

Product Designations

Series Name	Operational-part Type	Switch Functions	Current Capacity	Type of Terminals
C	T	A	0	1

Operational-part	Symbol
Toggle	T

Current Capacity	Symbol
6A 125/250V AC	0
3A 125/250V AC	1

Type of Terminals	Symbol
Solder Lug	1

SwitchFunctions			Symbol	
The Opposite Side	Center	Key Thread Side	SP	DP
ON	-	OFF	A	K
ON	-	ON	D	N
ON	OFF	ON	E	P
<ON>	OFF	<ON>	G	S

< > = Momentary

Silhouette（CTD01）

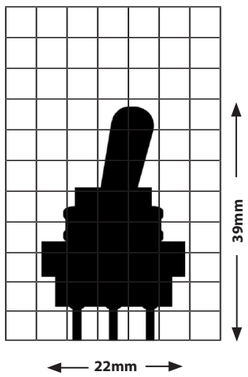

■ Examples of Terminal Figures（SP, ON-OFF）

Solder Lug

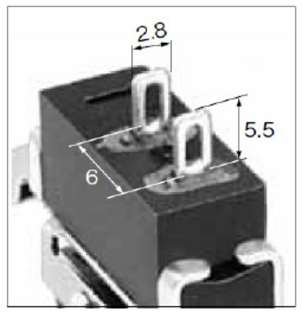

Toggle

C Series

250V/125VAC
6A
3A

Solder Lug

SP 2P

* For products other than those listed above or for custom items, please contact us.

Switch Names, Functions, Terminal Diagram

S P

Product Name	Resistive Load AC125/250V DC30V	Product Name	Resistive Load AC125/250V DC30V	Circuit	Functions <> = Momentary		
CTA01	6A	CTA11	3A	SPST	ON 2-3	—	OFF
CTD01	6A	CTD11	3A	SPDT	ON 2-3	—	ON 2-1
CTE01	6A	CTE11	3A	SPDT	ON 2-3	OFF	ON 2-1
CTG01	6A	CTG11	3A	SPDT	‹ON› 2-3	OFF	‹ON› 2-1

Terminal Diagram

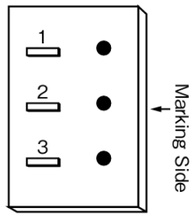

*** Terminal Numbers are not indicated on the case.**

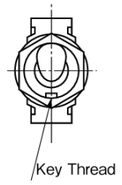

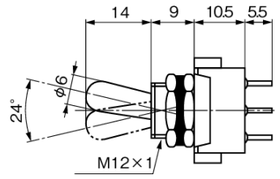

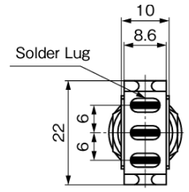

D P

Product Name	Resistive Load AC125/250V DC30V	Product Name	Resistive Load AC125/250V DC30V	Circuit	Functions <> = Momentary		
CTK01	6A	CTK11	3A	DPST	ON 2-3 5-6	—	OFF
CTN01	6A	CTN11	3A	DPDT	ON 2-3 5-6	—	ON 2-1 5-4
CTP01	6A	CTP11	3A	DPDT	ON 2-3 5-6	OFF	ON 2-1 5-4
CTS01	6A	CTS11	3A	DPDT	‹ON› 2-3 5-6	OFF	‹ON› 2-1 5-4

Terminal Diagram

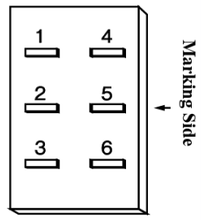

*** Terminal Numbers are not indicated on the case.**

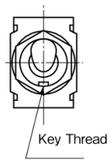

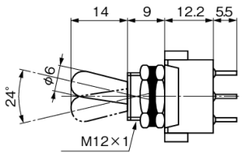

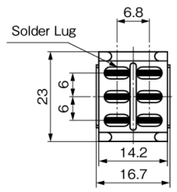

*** For products other than those listed above or for custom items, please contact us.**

Mounting Hole Dimensions, Mounting Parts Dimentions

Mounting Hole Dimensions

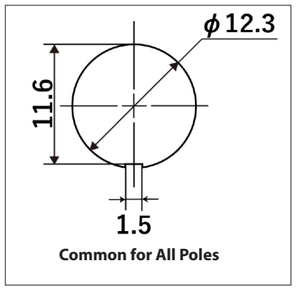

Mounting Parts Dimensitions

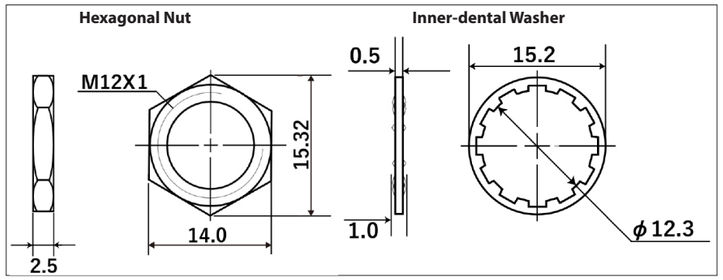

*** Regarding the mounting parts, only the lower nut is pre-installed on the main unit; other parts are included separately.**

Dimensions of Terminals

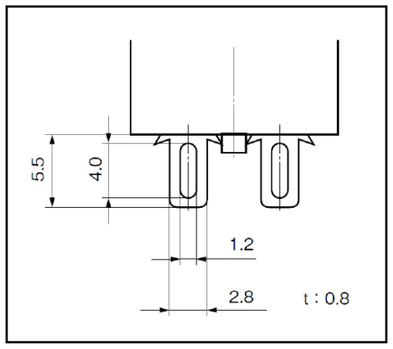

Compliance with the European RoHS Directive

All DIP switches, control switches, connectors, and terminal blocks manufactured by OTAX with the following RoHS Directive:

Directive 2011/65/EU of the European Parliament and of the Council on the restriction of the use of certain hazardous substances in electrical and electronic equipment (RoHS).

Our products do not contain any of the ten specified hazardous substances (except for exempted applications):

Lead (Pb) Mercury (Hg) Cadmium (Cd) Hexavalent chromium (Cr^{6+}) Polybrominated biphenyls (PBB) Polybrominated diphenyl ethers (PBDE) Di(2-ethylhexyl) phthalate (DEHP) Butyl benzyl phthalate (BBP) Dibutyl phthalate (DBP) Diisobutyl phthalate (DIBP)

*** For products other than those listed above or for custom items, please contact us.**

Toggle
C Series
250V/125VAC
6A
3A
Solder Lug
SP 2P

Outline of the Series

This is a compact switch series rated up to 6A, designed to minimize the height below the panel to as little as 16 mm (for single-pole types), while offering an affordable price. Available types include toggle, rocker, and slide switches.

Features of the Series

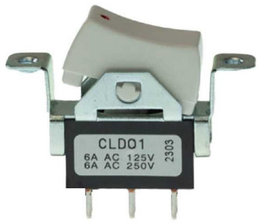

1. All standard models use UL94 V-1 certified flame-retardant resin for the case material.
2. The contact structure is designed to minimize bounce, ensuring stable switching performance.
3. All models achieve high performance in a compact and cost-effective design (compared to our conventional products), despite being rated for 6A.

Common Specifications

■ Ratings

Voltage \ Symbol	01	11	Load	Notes
AC125/250V	6A	3A	Resistive Load	Load only with Resistive, Power Factor=1
DC30V	6A	3A		

* A resistive load refers to a load consisting solely of resistance. In actual circuits, however, there may be inductive, capacitive, or motor loads, each of which can generate inrush current. Therefore, when selecting a switch, be sure to choose a rating with sufficient margin above the steady-state current.

For more details, please refer to "Useful Advices and Precautions on Usage of Operational Switches."

Contact Resistance	20 mΩ Max. (DC2V 1A) (Initial value)
Withstanding Voltage	AC1,500V 1 Minute
Insulating Resistance	1,000MΩ Min. (DC500V)
Electrical Life	10,000 times
Operating Temperature Range	-20℃～+70℃
Storage Temperature Range	-20℃～+70℃
Hand-soldering Conditions	350 ± 3℃ within 3 sec.

Packaging Quantity	
CL □ 01	200 pcs
Others	100 pcs

* For products other than those listed above or for custom items, please contact us.

Product Designations

Series Name	Operational-part Type	Switch Functions	Current Capacity	Blacket Figures
C	L	A	0	5

Operational-part	Symbol
Rocker	L

Current Capacity	Symbol
6A 125/250V AC	0
3A 125/250V AC	1

SwitchFunctions			Symbol
Left Push	Center	Right Push	SP
ON	-	OFF	A
ON	-	ON	D

Names of Blacket	Mounting Hole Dimensions	Symbol
Recessing Bracket for Panel-mount with Tapping (29mm pitch)	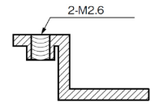	1
Shallowly Recessing Bracket for Panel-mount with Tapping (35mm pitch)	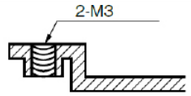	5
Flat Bracket for Panel-mount without Tapping (35mm pitch)	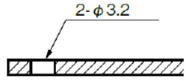	6

Silhouette (CLD05)

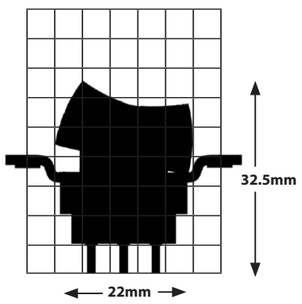

■ Examples of Terminal Figures (ON-OFF)

Solder Lug

* For products other than those listed above or for custom items, please contact us.

Rocker
C Series
250V/125VAC
6A
3A
Solder Lug
SP

Switch Names, Functions, Terminal Diagram, Dimensions of Terminals

S P

Product Name	Resistive Load AC125/250V DC30V	Product Name	Resistive Load AC125/250V DC30V	Circuit	Functions <> = Momentary		
CLA0□	6A	CLA1□	3A	SPST	ON 2-3	—	OFF
CLD0□	6A	CLD1□	3A	SPDT	ON 2-3	—	ON 2-1

Terminal Diagram

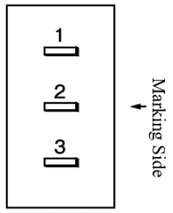

* Terminal Numbers are not indicated on the case.

Recessing Bracket for Panel-mount with Tapping（29mm pitch）

C L □ □ 1

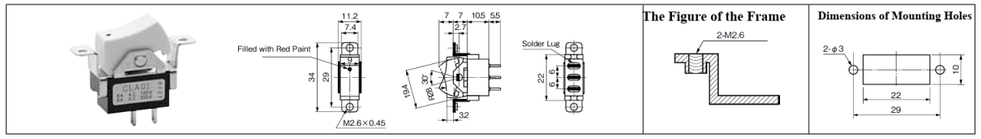

Shallowly Recessing Bracket for Panel-mount with Tapping（35mm pitch）

C L □ □ 5

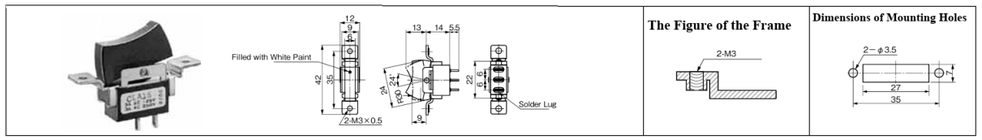

Flat Bracket for Panel-mount without Tapping（35mm pitch）

C L □ □ 6

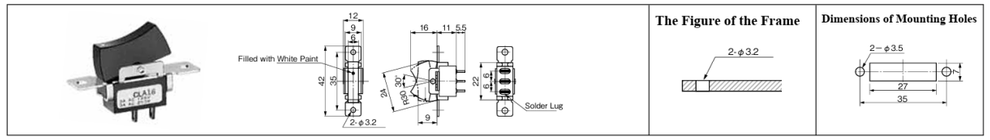

* For products other than those listed above or for custom items, please contact us.

Dimensions of Terminals

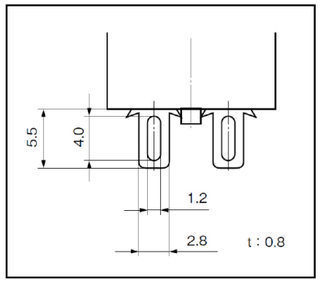

Compliance with the European RoHS Directive

All DIP switches, control switches, connectors, and terminal blocks manufactured by OTAX with the following RoHS Directive:

Directive 2011/65/EU of the European Parliament and of the Council on the restriction of the use of certain hazardous substances in electrical and electronic equipment (RoHS).

Our products do not contain any of the ten specified hazardous substances (except for exempted applications):

Lead (Pb) Mercury (Hg) Cadmium (Cd) Hexavalent chromium (Cr^{6+}) Polybrominated biphenyls (PBB) Polybrominated diphenyl ethers (PBDE) Di(2-ethylhexyl) phthalate (DEHP) Butyl benzyl phthalate (BBP) Dibutyl phthalate (DBP) Diisobutyl phthalate (DIBP)

* For products other than those listed above or for custom items, please contact us.

Outline of the Series

This is a compact switch series rated up to 6A, designed to minimize the height below the panel to as little as 16 mm (for single-pole types), while offering an affordable price. Available types include toggle, rocker, and slide switches.

Features of the Series

1. All standard models use UL94 V-1 certified flame-retardant resin for the case material.
2. The contact structure is designed to minimize bounce, ensuring stable switching performance.
3. All models achieve high performance in a compact and cost-effective design (compared to our conventional products), despite being rated for 6A.

Common Specifications

■ Ratings

Voltage \ Symbol	01	11	Load	Notes
AC125/250V	6A	3A	Resistive Load	Load only with Resistive, Power Factor=1
DC30V	6A	3A		

* A resistive load refers to a load consisting solely of resistance. In actual circuits, however, there may be inductive, capacitive, or motor loads, each of which can generate inrush current. Therefore, when selecting a switch, be sure to choose a rating with sufficient margin above the steady-state current.

For more details, please refer to "Useful Advices and Precautions on Usage of Operational Switches."

Contact Resistance	20 mΩ Max. (DC2V 1A) (Initial value)
Withstanding Voltage	AC1,500V 1 Minute
Insulating Resistance	1,000MΩ Min. (DC500V)
Electrical Life	10,000 times
Operating Temperature Range	-20℃～+70℃
Storage Temperature Range	-20℃～+70℃
Hand-soldering Conditions	350±3℃ within 3 sec.

Packaging Quantity
400 pcs

* For products other than those listed above or for custom items, please contact us.

Product Designations

Series Name	Operational-part Type	Switch Functions	Current Capacity	Type of Terminals
C	S	A	0	1

Operational-part	Symbol
Slide	S

Current Capacity	Symbol
6A 125/250V AC	0
3A 125/250V AC	1

SwitchFunctions			Symbol
Left	Center	Right	SP
ON	-	OFF	A
ON	-	ON	D
ON	OFF	ON	E

Type of Terminals	Symbol
Solder Lug	1

■ Examples of Terminal Figures（ON-OFF）

Silhouette（CSD01）

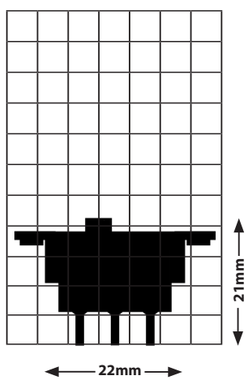

Solder Lug

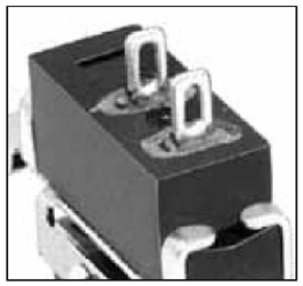

* For products other than those listed above or for custom items, please contact us.

Slide
C Series
250V/125VAC
6A
3A
Solder Lug
SP

Switch Names, Functions, Terminal Diagram, Dimensions of Terminals, Mounting Hole Dimensions

S P

Product Name	Resistive Load AC125/250V DC30V	Product Name	Resistive Load AC125/250V DC30V	Circuit	Functions <> はMomentary		
CSA01	6A	CSA11	3A	SPST	OFF	—	ON 2-3
CSD01	6A	CSD11	3A	SPDT	ON 2-1	—	ON 2-3
CSE01	6A	CSE11	3A	SPDT	ON 2-1	OFF	ON 2-3

Terminal Diagram

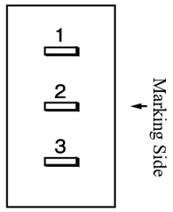

* Terminal Numbers are not indicated on the case.

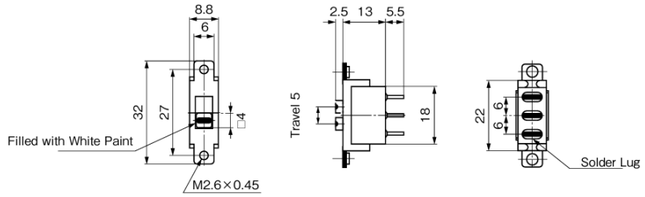

Mounting Holes Dimensions

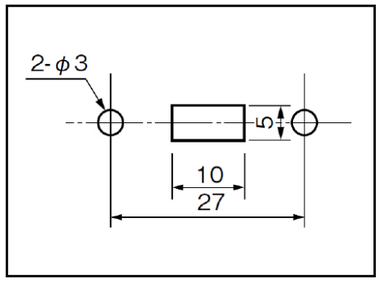

Dimensions of Terminals

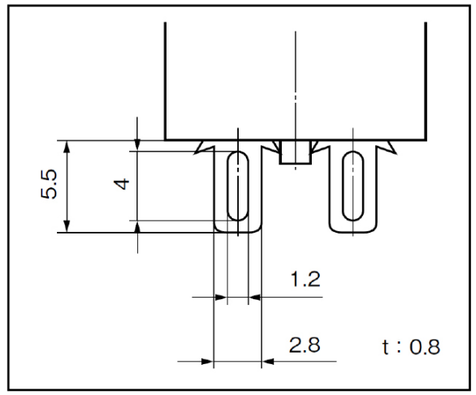

* For products other than those listed above or for custom items, please contact us.

Compliance with the European RoHS Directive

All DIP switches, control switches, connectors, and terminal blocks manufactured by OTAX with the following RoHS Directive:

Directive 2011/65/EU of the European Parliament and of the Council on the restriction of the use of certain hazardous substances in electrical and electronic equipment (RoHS).

Our products do not contain any of the ten specified hazardous substances (except for exempted applications):

Lead (Pb) Mercury (Hg) Cadmium (Cd) Hexavalent chromium (Cr^{6+}) Polybrominated biphenyls (PBB) Polybrominated diphenyl ethers (PBDE) Di(2-ethylhexyl) phthalate (DEHP) Butyl benzyl phthalate (BBP) Dibutyl phthalate (DBP) Diisobutyl phthalate (DIBP)

Slide
C Series
250V/125VAC
6A
3A
Solder Lug
SP

* For products other than those listed above or for custom items, please contact us.

Rotary

D Series

125VAC 6A
250VAC 3A

Quick Connect Terminal

Contacts Circuits are customizable

Outline of the Series

This 26×28 mm rotary switch can be custom-designed to meet your specific requirements, including the number of circuits, number of contacts, circuit configuration, and actuator shape.

Common Specifications

■ Ratings

Voltage	Ratings	Load	Notes
AC125V	6A	Resistive Load	Load only with Resistive, Power Factor=1
AC250V	3A		

* A resistive load refers to a load consisting solely of resistance. In actual circuits, however, there may be inductive, capacitive, or motor loads, each of which can generate inrush current. Therefore, when selecting a switch, be sure to choose a rating with sufficient margin above the steady-state current.
For more details, please refer to "Useful Advices and Precautions on Usage of Operational Switches."

Contact Resistance	30 mΩ Max. (DC2V 1A) (Initial value)
Withstanding Voltage	AC1,500V 1 Minute
Insulating Resistance	100MΩ Min. (DC500V)
Electrical Life	10,000 times
Operating Temperature Range	-20℃～ +70℃
Storage Temperature Range	-20℃～ +70℃
Hand-soldering Conditions	350 ± 3℃ within 3 sec.

Packaging Quantity
100 pcs

Silhouette（Bushign Type）

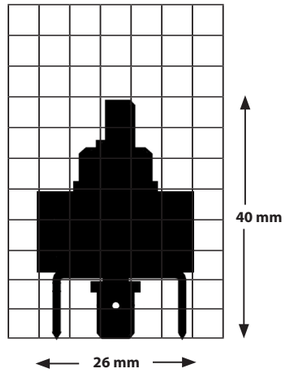

* For products other than those listed above or for custom items, please contact us.

Product Designations

Series Name	Degree of Step	Number of Circuits	Number of Contacts	Custom Reference Number	
D	C	4	4		

Degree of Step	Symbol
45 deg.	C

* The Shapes of the shaft can be selected from Round, D-cut, and from Knurling.
* There are two mounting types, Bughing and Frame.
* Custom Reference Number is the type name for custom products.

Bushing TYpe

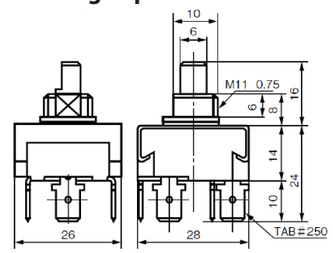

Frame TYpe

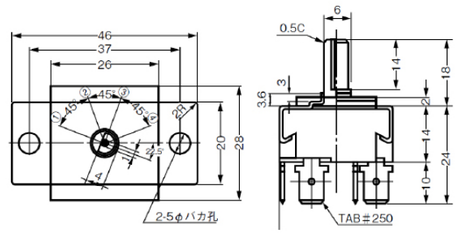

* Dimensions of the Shaft are temporal ones.

■ Examples of Circuit Diagrams

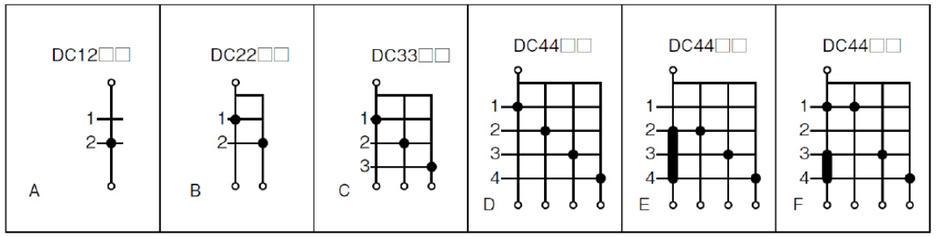

Compliance with the European RoHS Directive

All DIP switches, control switches, connectors, and terminal blocks manufactured by OTAX with the following RoHS Directive:
Directive 2011/65/EU of the European Parliament and of the Council on the restriction of the use of certain hazardous substances in electrical and electronic equipment (RoHS).
Our products do not contain any of the ten specified hazardous substances (except for exempted applications):
Lead (Pb) Mercury (Hg) Cadmium (Cd) Hexavalent chromium (Cr^{6+}) Polybrominated biphenyls (PBB) Polybrominated diphenyl ethers (PBDE) Di(2-ethylhexyl) phthalate (DEHP) Butyl benzyl phthalate (BBP) Dibutyl phthalate (DBP) Diisobutyl phthalate (DIBP)

Rotary

D Series

125VAC 6A
250VAC 3A

Quick Connect Terminal

Contacts Circuits are customizable

* For products other than those listed above or for custom items, please contact us.

Rotary

E Series

AC125V/ AC250V 20A 10A 6A

Quick Connect Terminal

Contacts Circuits are customizable

Outline of the Series

These rotary switches are designed for medium to high current applications, supporting ratings up to 20A. They can be custom-designed according to your specific requirements, including the number of circuits, number of contacts, step angle, circuit configuration, and actuator shape.
(All models comply with Directive 2011/65/EU of the European Parliament and of the Council on the restriction of the use of certain hazardous substances (RoHS).)

Common Specifications

■ Ratings

Symbol / Voltage	EC	EK	ER	Load	Notes
AC125V/AC250V	20A	10A	6A (Up to 4 Circuits) 20A (Up to 2Circuits)	Resistive Load	Load only with Resistive, Power Factor=1

* A resistive load refers to a load consisting solely of resistance. In actual circuits, however, there may be inductive, capacitive, or motor loads, each of which can generate inrush current. Therefore, when selecting a switch, be sure to choose a rating with sufficient margin above the steady-state current.

For more details, please refer to "Useful Advices and Precautions on Usage of Operational Switches."

Contact Resistance	30 mΩ Max. (DC2V 1A) (Initial value)
Withstanding Voltage	AC1,500V 1 Minute
Insulating Resistance	100MΩ Min. (DC500V)
Electrical Life	20,000 times
Operating Temperature Range	-20℃～ +70℃
Storage Temperature Range	-20℃～ +70℃
Hand-soldering Conditions	350 ± 3℃ within 3 sec.

Packaging Quantity
50 pcs

Product Designations

Series Name	Degree of Step	Number of Circuits	Number of Contacts	Custom Reference Number	
E	C	7	6		
		The Vertical Lines of the Circuit Diagram.	The Horizontal Lines of the Circuit Diagram.	* Custom Reference Number is the type name for custom products.	

Silhouette (EC76 □□)

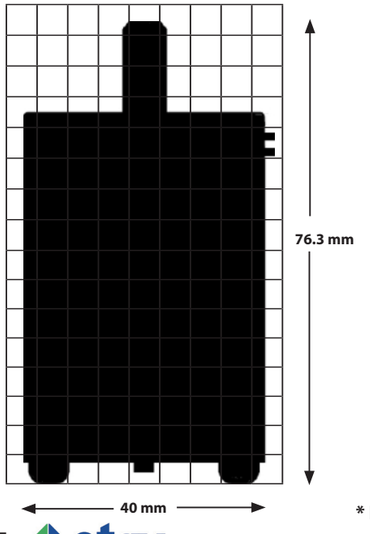

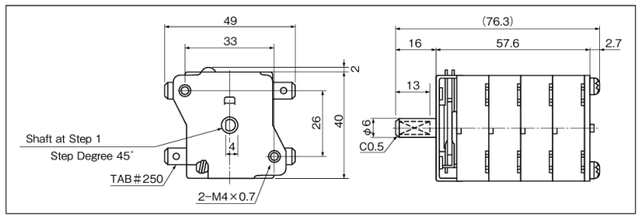

■ Circuit Diagrams (Examble)

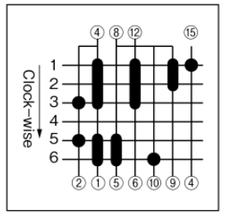

(Parameters such as number of common terminals, number of circuits, or number of steps can be optionally designed.)

The Dimensions of Shaft are for reference only.

* For products other than those listed above or for custom items, please contact us.

Rotary

E Series

AC125V/ AC250V 20A 10A 6A

Quick Connect Terminal

Contacts Circuits are customizable

Series Name	Degree of Step	Number of Circuits	Number of Contacts	Custom Reference Number	
E	K	4	5		
		The Vertical Lines of the Circuit Diagram.	The Horizontal Lines of the Circuit Diagram.	* Custom Reference Number is the type name for custom products.	

Silhouette (EK44 □□)

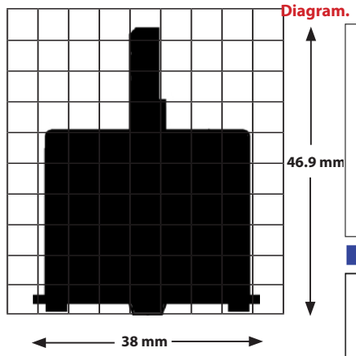

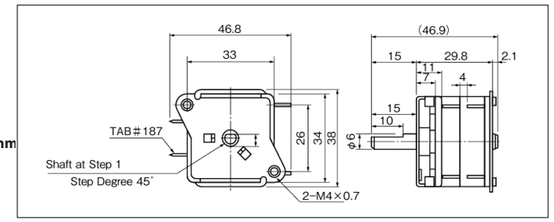

■ Circuit Diagrams (Examble)

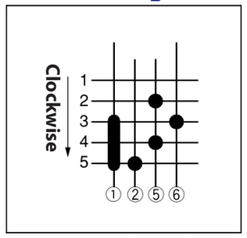

(Parameters such as number of common terminals, number of circuits, or number of steps can be optionally designed.)

However, the number of circuts is up to 6 (three-tier).

The Dimensions of Shaft are for reference only.

Series Name	Degree of Step	Number of Circuits	Number of Contacts	Custom Reference Number	
E	R	4	5		
		The Vertical Lines of the Circuit Diagram.	The Horizontal Lines of the Circuit Diagram.	* Custom Reference Number is the type name for custom products.	

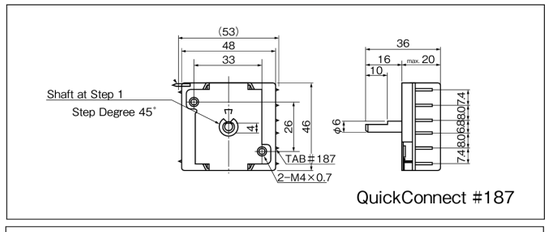

Quick Connect #187

Quick Connect #250

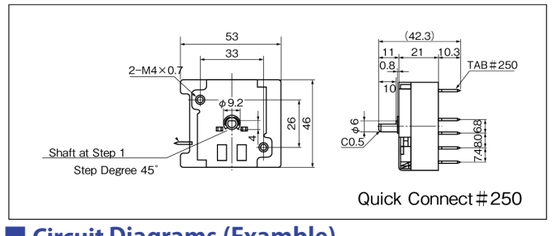

■ Circuit Diagrams (Examble)

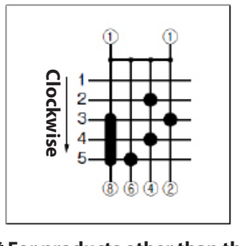

(Parameters such as number of common terminals, number of circuits, or number of steps can be optionally designed.)

However, the number of circuts is up to 6 (three-tier).

The Dimensions of Shaft are for reference only.

Silhouette (ER45 □□) TAB#250

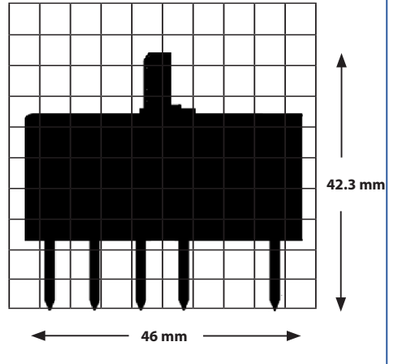

* For products other than those listed above or for custom items, please contact us.

Toggle

FX Series

250V/125VAC 6A

Solder Lug PCB Terminal

SP 2P 3P 4P

Outline of the Series

These compact, high-reliability switches are rated for 6A and designed for easy panel or PCB mounting. The lineup includes toggle, splash-proof toggle, rocker, and push-button switches.

Features of the Series

1 Six types of actuators are available to suit different panel designs and applications, including lock-lever types to prevent accidental operation and high-strength large bushing types (M12).
2 A built-in stopper mechanism prevents the knob from sinking.
3 Independent springs are used for each switching mechanism type to ensure contact stability.
4 Metal parts in the frame are minimized to maintain high insulation and safety.
5 UL94 V-0 flame-retardant resin with excellent heat resistance, electrical insulation, and mechanical strength is used.
6 A support mechanism ensures secure contact between the movable contact and the common terminal (fixed contact), reducing bounce.
7 The terminal pitch is 5 mm, suitable for both standard inch-pitch and metric-pitch PCBs.
8 Silver alloy is used for the contacts, offering high contact reliability and excellent arc resistance.
9 Switch height is standardized across all models from single-pole to 4-pole, optimized for PCB mounting.
10 The frame is made from stainless steel for superior corrosion resistance.

(All models comply with Directive 2011/65/EU of the European Parliament and of the Council (RoHS) regarding the restriction of the use of certain hazardous substances.)

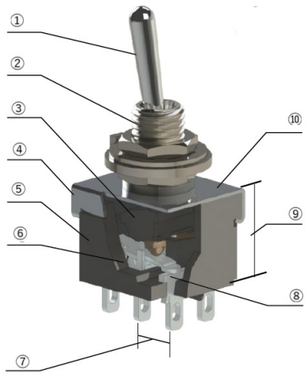

Common Specifications

■ Ratings

Silver Alloy Contact	Gold Plating Contact	Load	Notes
AC125/250V 6A	0.4VA AC・DC20V MAX	Resistive Load	Load only with Resistive, Power Factor=1
DC30V 3A			

* A resistive load refers to a load consisting solely of resistance. In actual circuits, however, there may be inductive, capacitive, or motor loads, each of which can generate inrush current. Therefore, when selecting a switch, be sure to choose a rating with sufficient margin above the steady-state current.
For more details, please refer to "Useful Advices and Precautions on Usage of Operational Switches."

Packaging Quantity	
SP・DP	400 pcs
3P・4P	200 pcs
PCB Terminal (all poles)	200 pcs
Long Toggle (all poles)	200 pcs

Contact Resistance	10 mΩ Max. (DC2V 1A) (Initial value)
Withstanding Voltage	AC1,000V 1 Minute
Insulating Resistance	1,000MΩ Min. (DC500V)
Electrical Life	25,000 times (Functions <ON>-OFF-<ON> (G, S) Types are 5,000 times.)
Operating Temperature Range	-20℃～+70℃
Storage Temperature Range	-20℃～+70℃
Hand-soldering Conditions	350±3℃ within 3 sec.

* For products other than those listed above or for custom items, please contact us.

Product Designations

Series Name		Poles	Operational-part Type	Switch Functions	Current Capacity	Type of Terminals	Contact Materials
F	X		T	D	0	1	

Poles	Symbol
1	(none)
2	(none)
3	3
4	4

Operational-part	Symbol
Toggle	T
Toggle for PCB Mount	H
Splash-proof Toggle	W

Contact Materials	Symbol
Silver Alloy	(none)
Gold Plating	G

* For use with micro-currents, please select gold-plated contacts. Silver contacts may result in unstable performance at low currents, as oxidation or sulfide films on the surface are not removed by arcing.

SwitchFunctions			Symbol	
The Opposite Side	Center	Key Thread Side	SP 3P	DP 4P
ON	-	ON	D	N
ON	OFF	ON	E	P
ON	-	<ON>	F	R
<ON>	OFF	<ON>	G	S
ON	OFF	<ON>	H	T
ON	ON	ON		PA

< > = Momentary

Type of Terminals	Symbol
Solder Lug	1
PCB Terminal	3

* PCB Terminal is available only for Toggle for PCB Mount (H).

Shape of Operational-part	Symbol
Standard Toggle	0
Large Toggle	1
Short Toggle	2
Long Toggle	3
Flat-lever Toggle	4
Lock-lever Toggle	5

* For Toggle for PCB Mount, only Type 0 is availabe.

Silhouette (FXTD01)

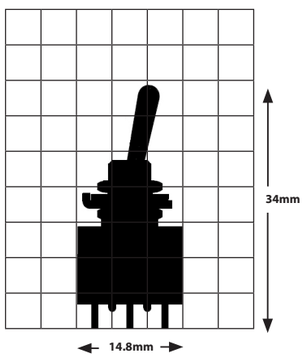

■ Dimensions of Terminals F X

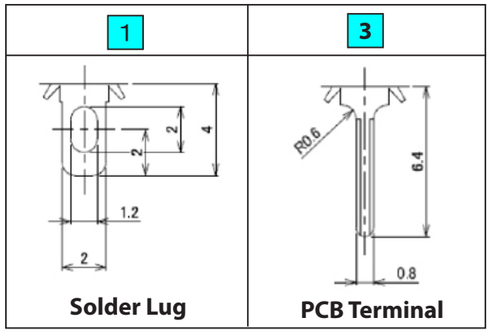

* For products other than those listed above or for custom items, please contact us.

Toggle

FX Series

250V/125VAC 6A

Solder Lug PCB Terminal

SP 2P 3P 4P

Toggle

FX Series

250V/125VAC 6A

Solder Lug PCB Terminal

SP 2P 3P 4P

Switch Names, Functions, Terminal Diagram

Standard Toggle SP Solder Lug

F X ☐ T ☐ 0 1 ☐ ■ Shape of Operational-part

Product Name (SP)	Circuit	Functions <> = Momentary		
FXTD01	SPDT	ON 2-3	—	ON 2-1
FXTE01	SPDT	ON 2-3	OFF	ON 2-1
FXTF01	SPDT	ON 2-3	—	‹ON› 2-1
FXTG01	SPDT	‹ON› 2-3	OFF	‹ON› 2-1
FXTH01	SPDT	ON 2-3	OFF	‹ON› 2-1

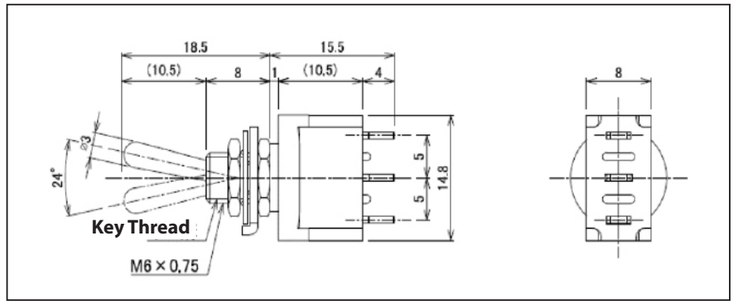

■ Terminal Diagram

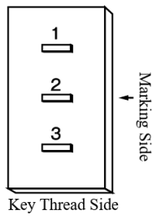

* Terminal Numbers are not indicated on the case.

Standard Toggle DP Solder Lug

F X ☐ T ☐ 0 1 ☐ ■ Shape of Operational-part

Product Name (DP)	Circuit	Functions <> はMomentary		
FXTN01	DPDT	ON 2-3 5-6	—	ON 2-1 5-4
FXTP01	DPDT	ON 2-3 5-6	OFF	ON 2-1 5-4
FXTR01	DPDT	ON 2-3 5-6	—	‹ON› 2-1 5-4
FXTS01	DPDT	‹ON› 2-3 5-6	OFF	‹ON› 2-1 5-4
FXTT01	DPDT	ON 2-3 5-6	OFF	‹ON› 2-1 5-4
FXTPA01	SP3T	ON 2-3 5-6	ON 2-3 4-5	ON 2-1 5-4

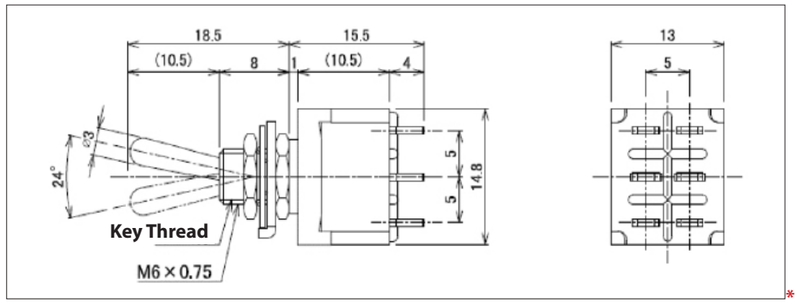

■ Terminal Diagram

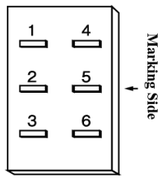

* Terminal Numbers are not indicated on the case.

* For products other than those listed above or for custom items, please contact us.

Toggle

FX Series

250V/125VAC 6A

Solder Lug PCB Terminal

SP 2P 3P 4P

Standard Toggle 3 P Solder Lug

F X 3 T ☐ 0 1 ☐ ■ Shape of Operational-part

Product Name (3P)	Circuit	Functions <> はMomentary		
FX3TD01	3PDT	ON 2-3 5-6 8-9	—	ON 2-1 5-4 8-7
FX3TE01	3PDT	ON 2-3 5-6 8-9	OFF	ON 2-1 5-4 8-7
FX3TF01	3PDT	ON 2-3 5-6 8-9	—	‹ON› 2-1 5-4 8-7
FX3TG01	3PDT	‹ON› 2-3 5-6 8-9	OFF	‹ON› 2-1 5-4 8-7
FX3TH01	3PDT	ON 2-3 5-6 8-9	OFF	‹ON› 2-1 5-4 8-7

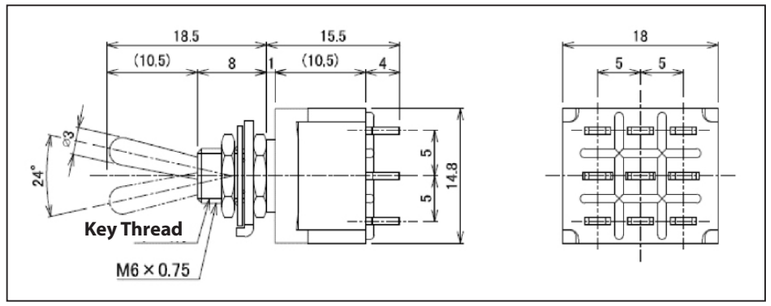

■ Terminal Diagram

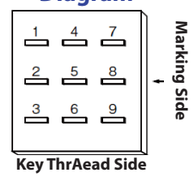

* Terminal Numbers are not indicated on the case.

Standard Toggle 4 P Solder Lug

F X 4 T ☐ 0 1 ☐ ■ Shape of Operational-part

Product Name (4P)	Circuit	Functions <> はMomentary		
FX4TN01	4PDT	ON 2-3 5-6 8-9 11-12	—	ON 2-1 5-4 8-7 11-10
FX4TP01	4PDT	ON 2-3 5-6 8-9 11-12	OFF	ON 2-1 5-4 8-7 11-10
FX4TR01	4PDT	ON 2-3 5-6 8-9 11-12	—	‹ON› 2-1 5-4 8-7 11-10
FX4TS01	4PDT	‹ON› 2-3 5-6 8-9 11-12	OFF	‹ON› 2-1 5-4 8-7 11-10
FX4TT01	4PDT	ON 2-3 5-6 8-9 11-12	OFF	‹ON› 2-1 5-4 8-7 11-10
FX4TPA01	DP3T	ON 2-3 5-6 8-9 11-12	ON 1-2 5-6 8-9 11-10	ON 2-1 5-4 8-7 11-10

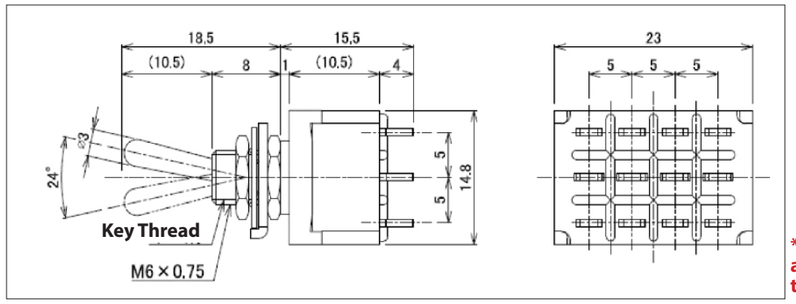

■ Terminal Diagram

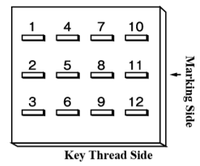

* Terminal Numbers are not indicated on the case.

* For products other than those listed above or for custom items, please contact us.

Toggle

FX Series

250V/125VAC 6A

Solder Lug PCB Terminal

SP 2P 3P 4P

Standard Toggle PCB Terminal

F X □ T □ 0 3 □

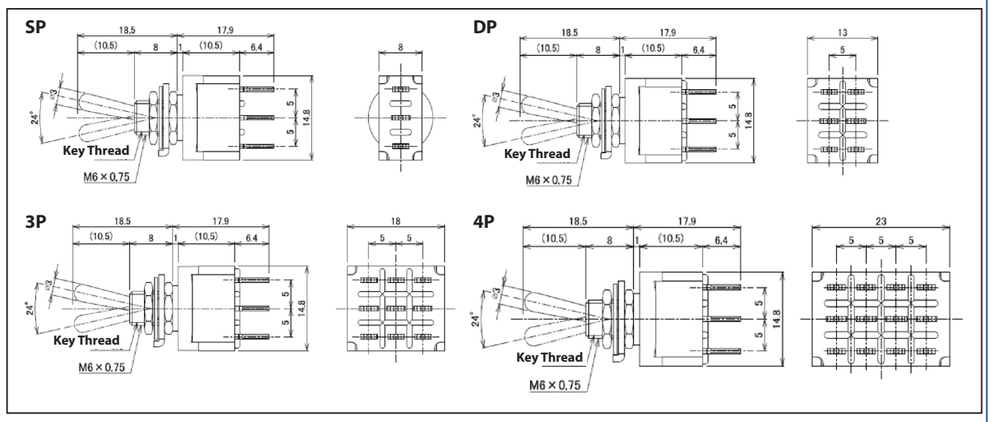

Dimensions of Mounting Holes for PCB

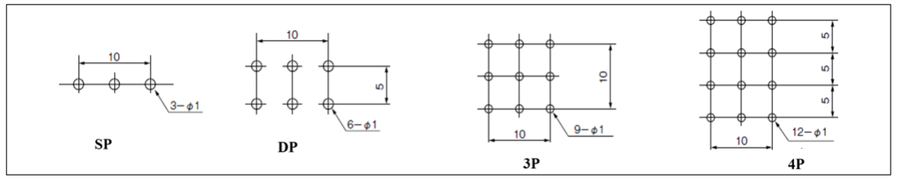

Large Toggle Solder Lug/ PCB Terminal（The below charts are for Solder Lug only.）

F X □ T □ 1 □ □

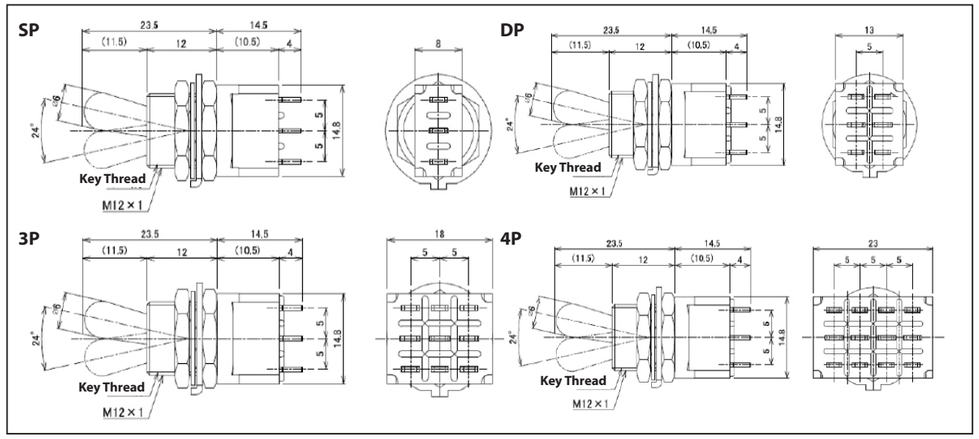

Shape of Operational-part

* For products other than those listed above or for custom items, please contact us.

Short Toggle Solder Lug/ PCB Terminal（The below charts are for Solder Lug only.）

F X □ T □ 2 □ □

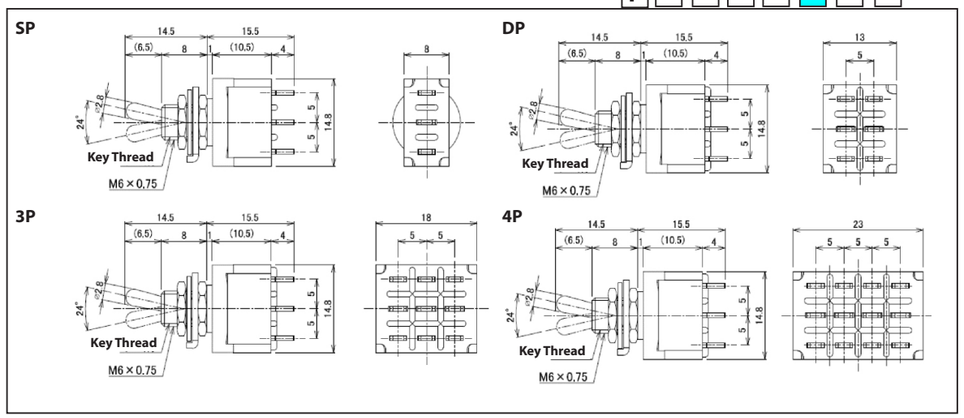

Shape of Operational-part

Long Toggle Solder Lug/ PCB Terminal（The below charts are for Solder Lug only.）

F X □ T □ 3 □ □

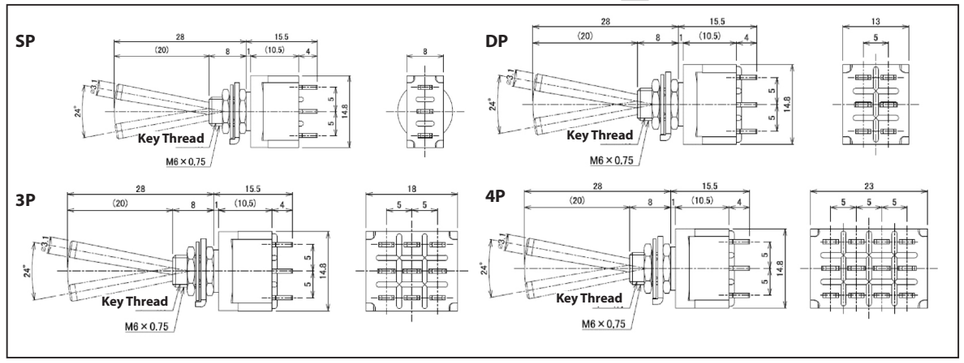

Shape of Operational-part

* For products other than those listed above or for custom items, please contact us.

Toggle

FX Series

250V/125VAC 6A

Solder Lug PCB Terminal

SP 2P 3P 4P

Flat-lever Toggle Solder Lug/ PCB Terminal（The below charts are for Solder Lug only.）

F X ☐ T ☐ 4 ☐ ☐

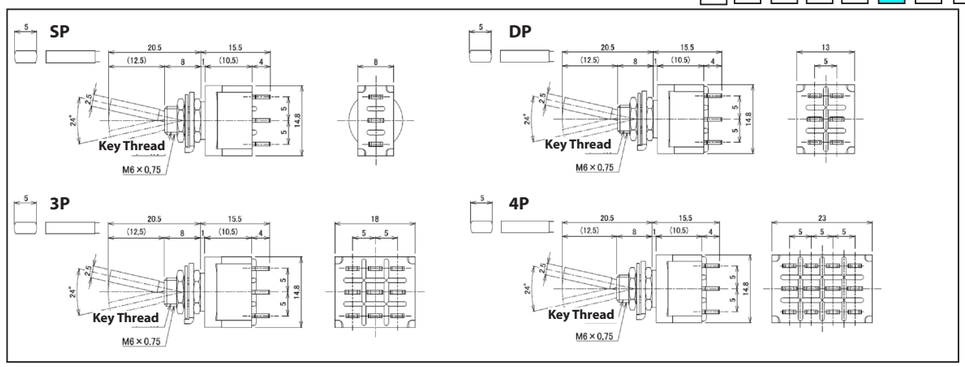

■ Shape of Operational-part

Lock-lever Toggle Solder Lug/ PCB Terminal（The below charts are for Solder Lug only.）

F X ☐ T ☐ 5 ☐ ☐

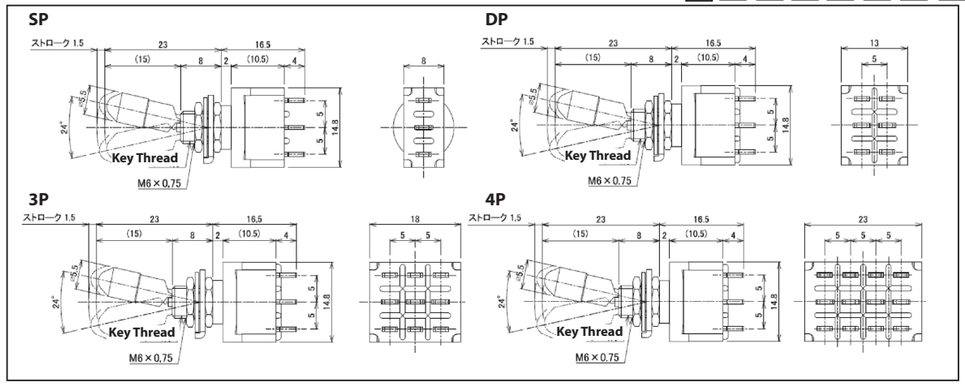

■ Shape of Operational-part

■ Characteristics

The lock-lever switch is designed so that the lever cap must be pulled upward before the switch can be operated. This mechanism helps prevent unintentional operation or malfunction of the switch.
It is ideal for use in devices where accidental operation could lead to serious consequences, such as medical equipment, communication devices, NC (numerical control) systems, and computer peripherals.

The figures of lever caps and lock mechanisms per each switch function.

■ The Shape of cap

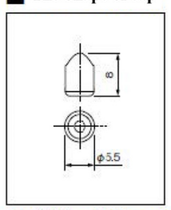

Types	Shapes
D.N	Key Thread
E. P	Key Thread
F. R	Key Thread
G.S	Key Thread
H.T	Key Thread

● The standard type is made of Nickel/ Chrome.

* For products other than those listed above or for custom items, please contact us.

Toggle

FX Series

250V/125VAC 6A

Solder Lug PCB Terminal

SP 2P 3P 4P

PCB Mount Toggle PCB Terminal

F X ☐ H ☐ 0 3 ☐

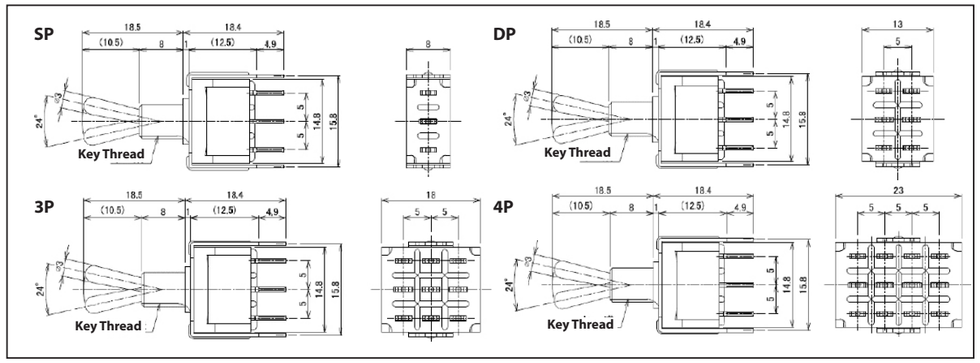

■ Shape of Operational-part

Splash-proof Toggle Solder Lug/ PCB Terminal（The below charts are for Solder Lug only.）

F X ☐ W ☐ 0 1 ☐

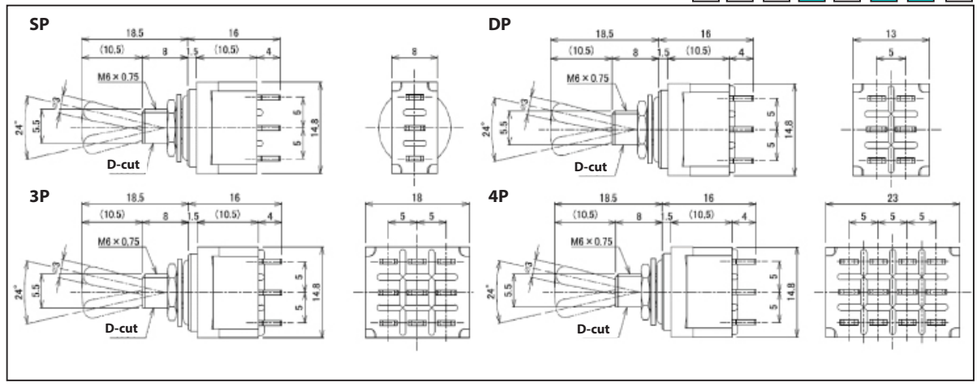

■ Shape of Operational-part

■ Terminal Diagram

* Terminal Numbers are not indicated on the case.

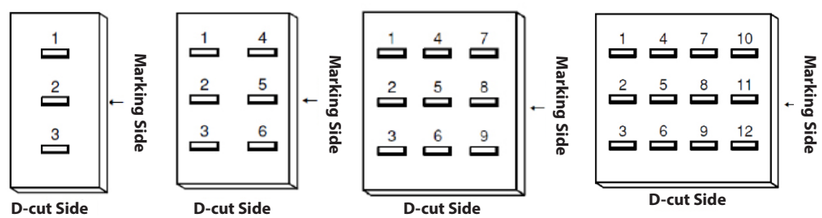

* For products other than those listed above or for custom items, please contact us.

Mounting Hole Dimensions, Mounting Parts Dimensions

Mounting Hole Dimensions (Bushing Type)

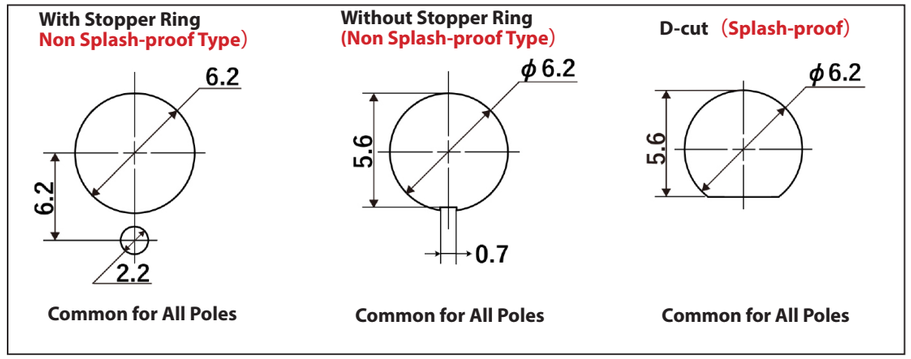

Mounting Parts Dimensions/ Mounting Method

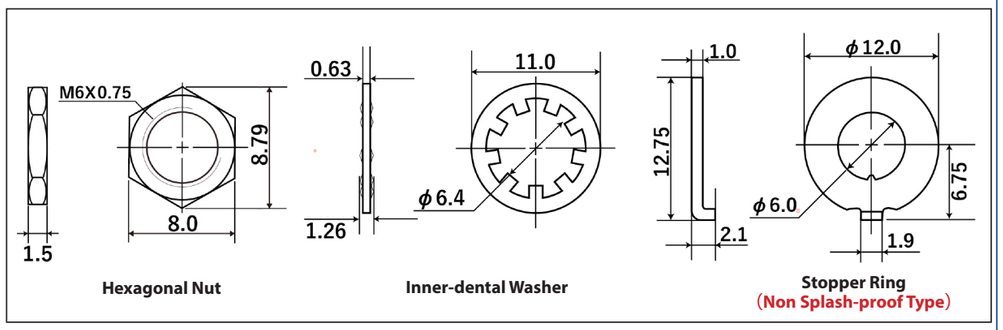

Mounting Hole Dimensions (Large Toggle)

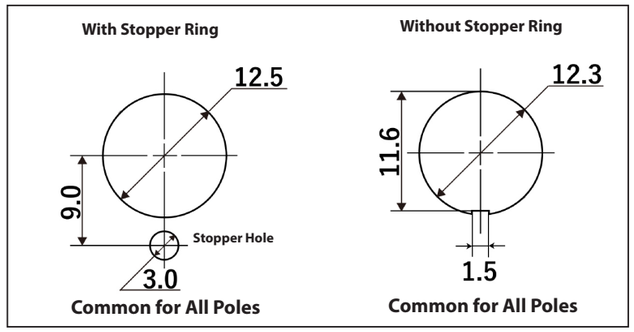

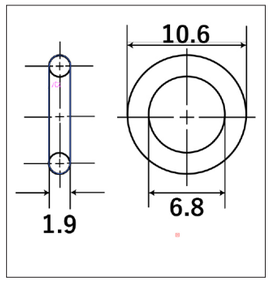

O-ring
(Splash-paroof)

Mounting Parts Dimensions (Large Toggle)

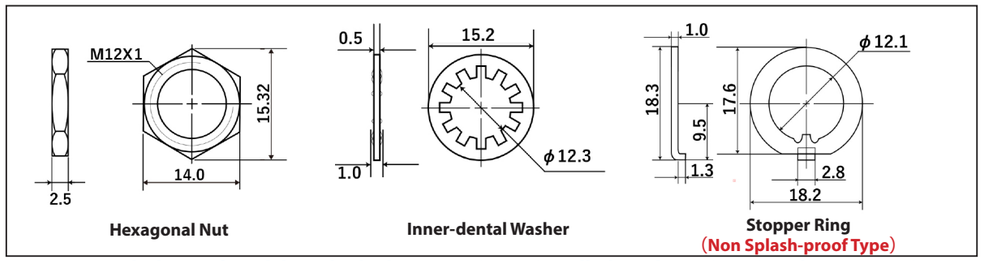

* For non-splash-proof models, only the lower nut is pre-installed on the main unit; other accessories are included separately. For splash-proof models, all accessories are pre-installed upon delivery.

* For products other than those listed above or for custom items, please contact us.

Hexagonal Nut Inner-dental Washer

Mounting Method (Splash-proof)

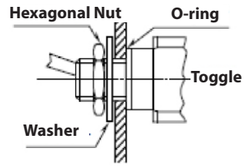

Splash-proof Cap, Other Parts

Hexagonal Splash-proof Cap

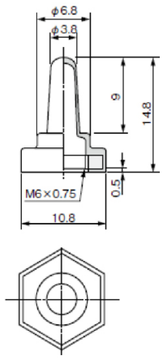

Materials	Color	Part Number
Chloroprene Rubber	Black	6547-0750

Note: Wiring Diagrams for ON-ON-ON circuit (PA, SP3T, DP3T)

Regarding RA type switch, please connect the wire at the part of ⊖.

SP3T

Switch Operation	Key Thread	Key Thread	Key Thread
Wiring Diagram	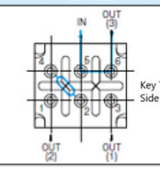	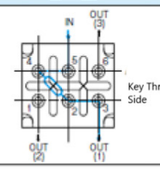	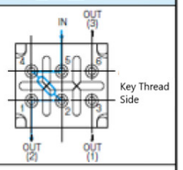
Symbol	Switch Properties		
□□PA□	ON	ON	ON
Connected Terminals	5 - 6	5 - 3	5 - 1

Terminal numbers are not indicated on the case.

DP3T

Switch Operation	Key Thread	Key Thread	Key Thread
Wiring Diagram	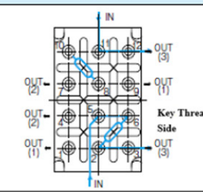	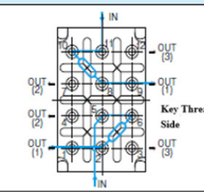	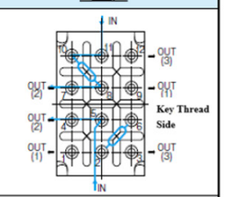
Symbol	Switch Porperties		
□□PA□	ON	ON	ON
Connected Terminals	5 - 3 11 - 12	5 - 1 11 - 9	5 - 4 11 - 7

* The above numbers from 1 through 12 are not indicated on the case.

* For products other than those listed above or for custom items, please contact us.

Rocker

FX Series

250V/125VAC 6A

Solder Lug PCB Terminal

SP 2P 3P 4P

Outline of the Series

These compact, high-reliability switches are rated for 6A and designed for easy panel or PCB mounting. The lineup includes toggle, splash-proof toggle, rocker, and push-button switches.

Features of the Series

1 Two types of actuators are available—lever type and rocker type—to suit various panel designs and applications. In addition to standard screw-mounted panel installation, snap-in and PCB-mounted versions are also available.
2 Independent springs are used for each switching mechanism type to ensure contact stability.
3 Metal parts in the frame are minimized to maintain high insulation and safety.
4 UL94 V-0 flame-retardant resin with excellent heat resistance, electrical insulation, and mechanical strength is used.
5 A support mechanism ensures secure contact between the movable contact and the common terminal (fixed contact), reducing bounce.
6 The terminal pitch is 5 mm, suitable for both standard inch-pitch and metric-pitch PCBs.
7 Silver alloy is used for the contacts, offering high contact reliability and excellent arc resistance.
8 Switch height is standardized across all models from single-pole to 4-pole, optimized for PCB mounting.
9 The frame is made from stainless steel for superior corrosion resistance.
(All models comply with Directive 2011/65/EU of the European Parliament and of the Council (RoHS) regarding the restriction of the use of certain hazardous substances.)

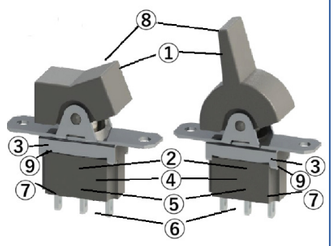

Common Specifications

■ Ratings

Silver Alloy Contact	Gold Plating Contact	Load	Notes
AC125/250V 6A	0.4VA AC・DC20V MAX	Resistive Load	Load only with Resistive, Power Factor=1
DC30V 3A			

* A resistive load refers to a load consisting solely of resistance. In actual circuits, however, there may be inductive, capacitive, or motor loads, each of which can generate inrush current. Therefore, when selecting a switch, be sure to choose a rating with sufficient margin above the steady-state current.
For more details, please refer to "Useful Advices and Precautions on Usage of Operational Switches."

Packaging Quantity
200 pcs

Contact Resistance	10 mΩ Max. (DC2V 1A) (Initial value)
Withstanding Voltage	AC1,000V 1 Minute
Insulating Resistance	1,000MΩ Min. (DC500V)
Electrical Life	25,000 times (<ON>-OFF-<ON>Type (G, S) only are 5,000 times.)
Operating Temperature Range	-20℃～+70℃
Storage Temperature Range	-20℃～+70℃
Hand-soldering Conditions	350 ± 3℃ within 3 sec.

* For products other than those listed above or for custom items, please contact us.

Product Designations

Series Name		Poles	Operational-part Type	Switch Functions	Current Capacity	Type of Terminals	Contact Materials
F	X		E	D	1	1	

Poles	Symbol
1	(none)
2	(none)
3	3
4	4

Operational-part/ Mount	Symbol
Standard /PCB Mount Lever/ Rocker	E
Snap-in Lever/ Rocker	L

* Snap-in Types are for SP(1P)/ DP(2P) only.

Contact Materials	Symbol
Silver Alloy	(none)
Gold Plating	G

* For use with micro-currents, please select gold-plated contacts. Silver contacts may result in unstable performance at low currents, as oxidation or sulfide films on the surface are not removed by arcing.

Switch Functions			Symbol	
The Opposite Side	Center	Key Thread Side	SP 3P	DP 4P
ON	-	ON	D	N
ON	OFF	ON	E	P
ON	-	<ON>	F	R
<ON>	OFF	<ON>	G	S
ON	OFF	<ON>	H	T

< > = Momentary

Type of Terminals	Symbol
Solder Lug	1
PCB Terminal	3

* PCB Mount Types are for 3 only.

Shape of Operational-part	Symbol
Lever	1
Rocker	2
Lever (PCB Mount)	3
Rocker (PCB Mount)	4

* PCB Mount Types are for 3 and 4 only.

■ Dimensions of Terminals

Silhouette (FXED21)

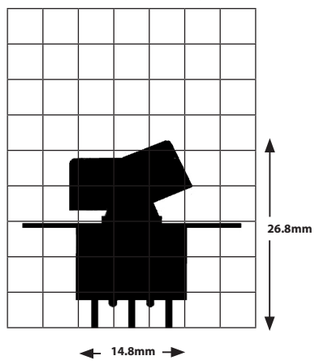

Silhouette (FXED11)

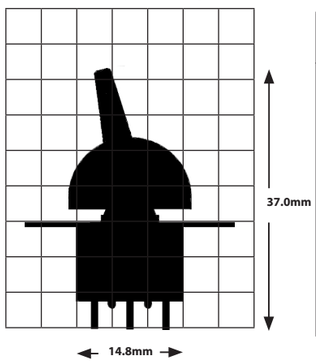

F X E/L

1	3
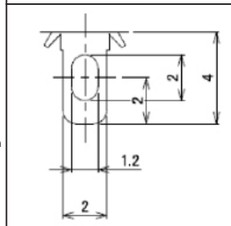	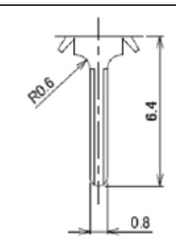
Solder Lug	PCB Terminal

* For products other than those listed above or for custom items, please contact us.

Rocker

FX Series

250V/125VAC 6A

Solder Lug PCB Terminal

SP 2P 3P 4P

Switch Names, Functions, Terminal Diagram

Standard Rocker SP Solder Lug

F X ☐ E ☐ 2 1 ☐

Product Name (SP)	Circuit	Functions <> = Momentary		
FXED21	SPDT	ON 2-3	—	ON 2-1
FXEE21	SPDT	ON 2-3	OFF	ON 2-1
FXEF21	SPDT	ON 2-3	—	<ON> 2-1
FXEG21	SPDT	<ON> 2-3	OFF	<ON> 2-1
FXEH21	SPDT	ON 2-3	OFF	<ON> 2-1

■ Shape of Operational-part

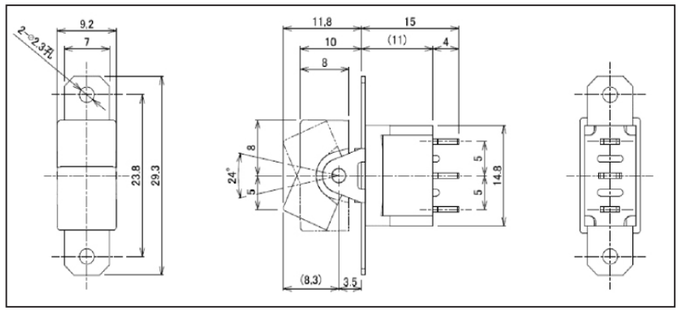

■ Terminal Diagram

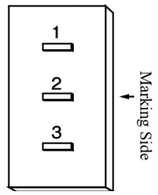

* Terminal Numbers are not indicated on the case.

Standard Rocker DP Solder Lug

F X ☐ E ☐ 2 1 ☐

Product Name (DP)	Circuit	Functions <> = Momentary		
FXEN21	DPDT	ON 2-3 5-6	—	ON 2-1 5-4
FXEP21	DPDT	ON 2-3 5-6	OFF	ON 2-1 5-4
FXER21	DPDT	ON 2-3 5-6	—	<ON> 2-1 5-4
FXES21	DPDT	<ON> 2-3 5-6	OFF	<ON> 2-1 5-4
FXET21	DPDT	ON 2-3 5-6	OFF	<ON> 2-1 5-4

■ Shape of Operational-part

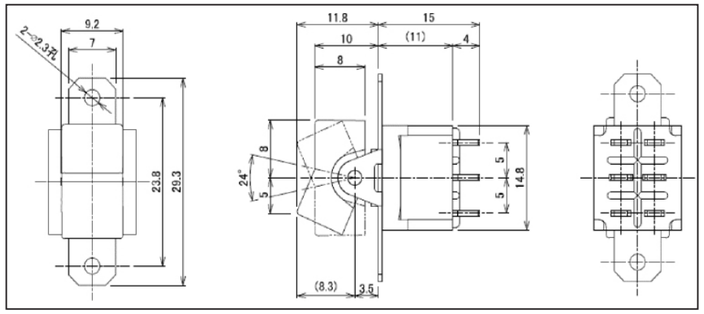

■ Terminal Diagram

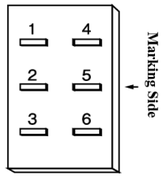

* Terminal Numbers are not indicated on the case.

* For products other than those listed above or for custom items, please contact us.

Rocker

FX Series

250V/125VAC 6A

Solder Lug PCB Terminal

SP 2P 3P 4P

Standard Rocker 3 P Solder Lug

F X 3 E ☐ 2 1 ☐

Product Name (3P)	Circuit	Functions <> = Momentary		
FX3ED21	3PDT	ON 2-3 5-6 8-9	—	ON 2-1 5-4 8-7
FX3EE21	3PDT	ON 2-3 5-6 8-9	OFF	ON 2-1 5-4 8-7
FX3EF21	3PDT	ON 2-3 5-6 8-9	—	<ON> 2-1 5-4 8-7
FX3EG21	3PDT	<ON> 2-3 5-6 8-9	OFF	<ON> 2-1 5-4 8-7
FX3EH21	3PDT	ON 2-3 5-6 8-9	OFF	<ON> 2-1 5-4 8-7

■ Shape of Operational-part

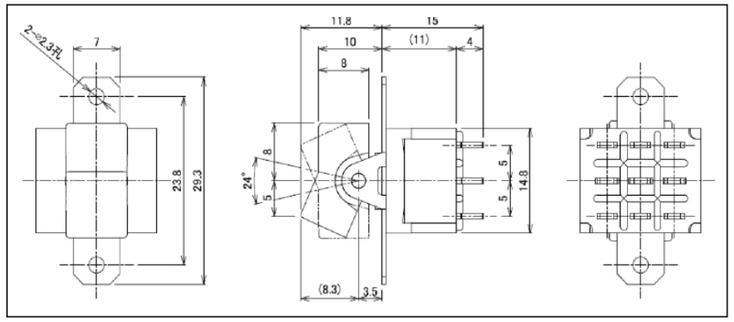

■ Terminal Diagram

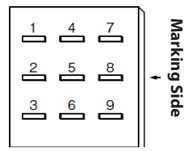

* Terminal Numbers are not indicated on the case.

Standard Rocker 4 P Solder Lug

F X 4 E ☐ 2 1 ☐

Product Name (4P)	Circuit	Functions <> = Momentary		
FX4EN21	4PDT	ON 2-3 5-6 8-9 11-12	—	ON 2-1 5-4 8-7 11-10
FX4EP21	4PDT	ON 2-3 5-6 8-9 11-12	OFF	ON 2-1 5-4 8-7 11-10
FX4ER21	4PDT	ON 2-3 5-6 8-9 11-12	—	<ON> 2-1 5-4 8-7 11-10
FX4ES21	4PDT	<ON> 2-3 5-6 8-9 11-12	OFF	<ON> 2-1 5-4 8-7 11-10
FX4ET21	4PDT	ON 2-3 5-6 8-9 11-12	OFF	<ON> 2-1 5-4 8-7 11-10

■ Shape of Operational-part

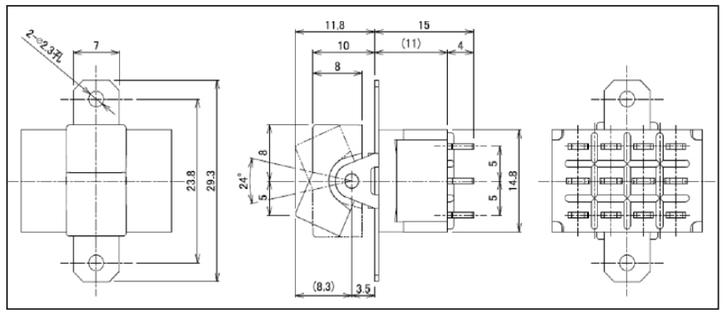

■ Terminal Diagram

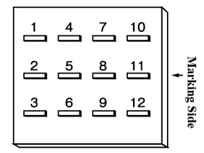

* Terminal Numbers are not indicated on the case.

* For products other than those listed above or for custom items, please contact us.

PCB Mount Rocker PCB Terminal

F X □ E □ 4 3 □

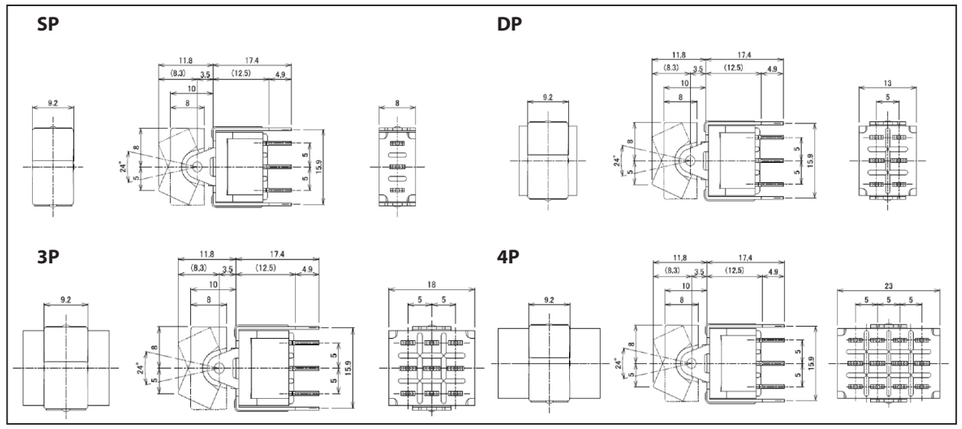

PCB Mount Lever PCB Terminal

F X □ E □ 3 3 □

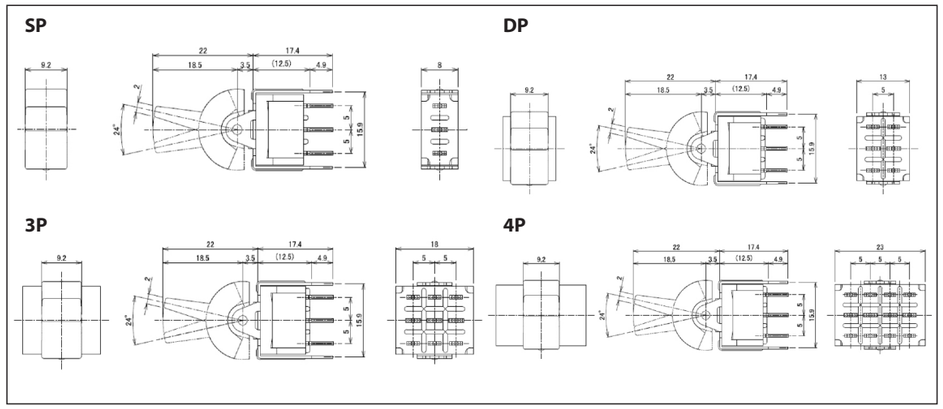

Snap-in Rocker Solder Lug/ PCB Terminal（The below charts show Solder Lug only）

F X □ L □ 2 □ □

Shape of Operational-part

SP DP

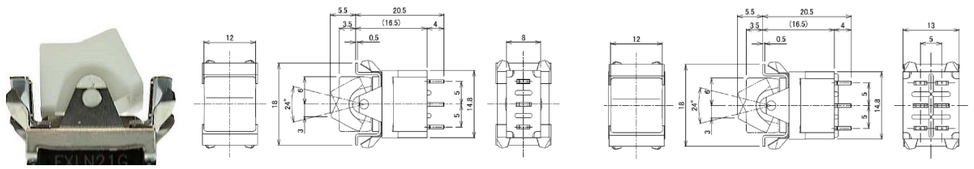

Standard Lever Solder Lug/ PCB Terminal（The below charta show Solder Lug only）

F X □ E □ 1 □ □

Shape of Operational-part

SP DP

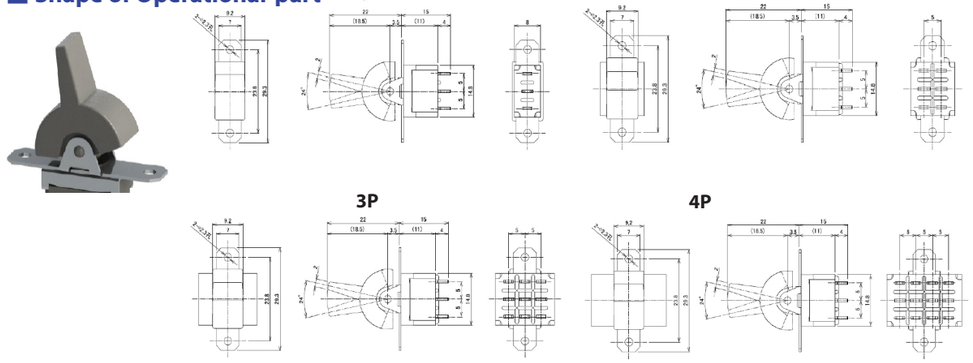

Snap-in Lever Solder Lug/ PCB Terminal（The below charts show Solder Lug only）

F X □ L □ 1 □ □

Shape of Operational-part

SP DP

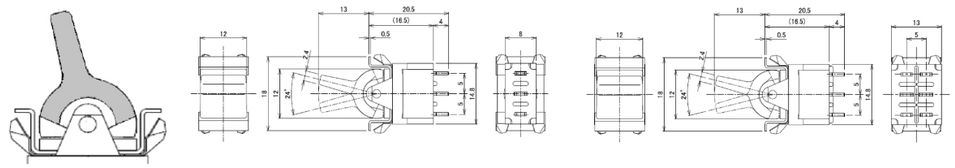

Mounting Hole Dimensions

Mounting Hole Dimensions

Standard Lever/ Rocker

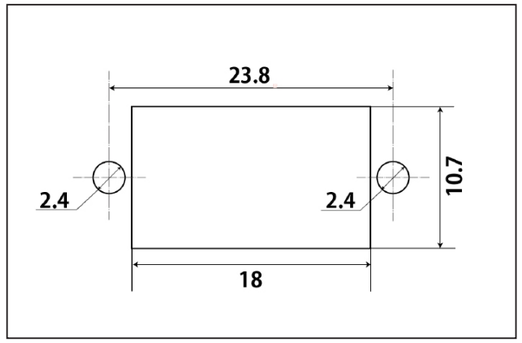

Snap-in

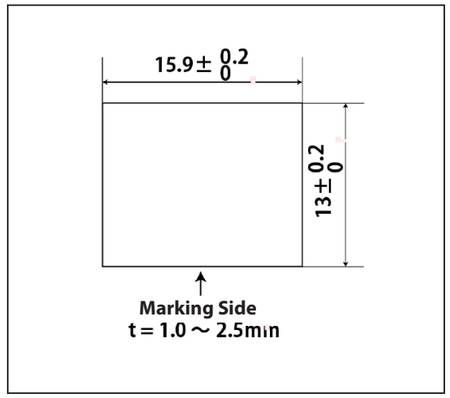

Mounting Hole Dimensions for PCB

PCB Terminal Mounting Holes Dimensions

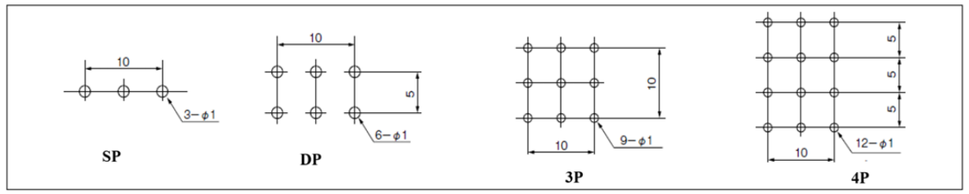

PCB Terminal Mounting Holes (with Brackets) Dimensions

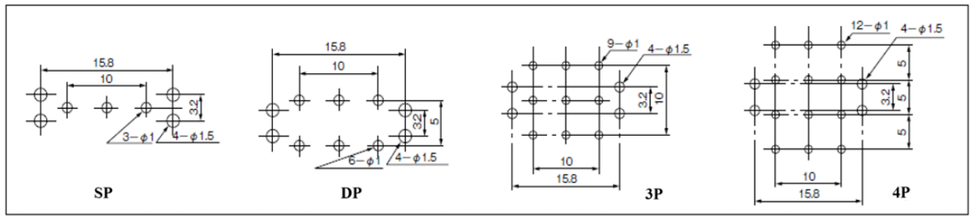

Rocker
FX Series
250V/125VAC 6A
Solder Lug PCB Terminal
SP 2P 3P 4P

Switches for Logic-Level Currents

Switches rated for several amperes typically use silver (or silver alloy) contacts.
While these contacts are generally reliable at higher currents, over time oxidation or sulfide buildup can increase contact resistance.
At logic-level currents—typically just a few milliamperes—the arc generated during switching is insufficient to remove such films, potentially leading to contact failure.
For such applications, we recommend switches with gold-plated contacts, designed specifically for low-current logic circuits.

Examples of Switches with Gold Plating Contacts（Left: NTD12、Right: FXTN01G）

Outline of the Series

These compact, high-reliability switches are rated for 6A and designed for easy panel or PCB mounting. The lineup includes toggle, splash-proof toggle, rocker, and push-button switches.

Features of the Series

1 Independent springs are used for each switching mechanism type to ensure contact stability.
2 Metal parts in the frame are minimized to maintain high insulation and safety.
3 UL94 V-0 flame-retardant resin with excellent heat resistance, electrical insulation, and mechanical strength is used.
4 A support mechanism ensures secure contact between the movable contact and the common terminal (fixed contact), reducing bounce.
5 The terminal pitch is 5 mm, suitable for both standard inch-pitch and metric-pitch PCBs.
6 Silver alloy is used for the contacts, offering high contact reliability and excellent arc resistance.
7 Switch height is standardized across all models from single-pole to 4-pole, optimized for PCB mounting.
8 The frame is made from stainless steel for superior corrosion resistance.
(All models comply with Directive 2011/65/EU of the European Parliament and of the Council (RoHS) regarding the restriction of the use of certain hazardous substances.)

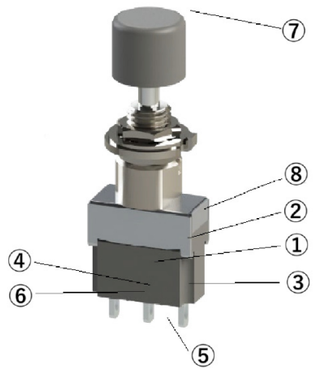

Common Specifications

■ Ratings

Silver Alloy Contact	Gold Plating Contact	Load	Notes
AC125/250V 6A	0.4VA AC • DC20V MAX	Resistive Load	Load only with Resistive, Power Factor=1
DC30V 3A			

* A resistive load refers to a load consisting solely of resistance. In actual circuits, however, there may be inductive, capacitive, or motor loads, each of which can generate inrush current. Therefore, when selecting a switch, be sure to choose a rating with sufficient margin above the steady-state current.
For more details, please refer to "Useful Advices and Precautions on Usage of Operational Switches."

Packaging Quantity
400 pcs

Contact Resistance	10 mΩ Max. (DC2V 1A) (Initial value)
Withstanding Voltage	AC1,000V 1 Minute
Insulating Resistance	1,000MΩ Min. (DC500V)
Electrical Life	25,000 times
Operating Temperature Range	-20℃～ +70℃
Storage Temperature Range	-20℃～ +70℃
Hand-soldering Conditions	350 ± 3℃ within 3 sec.

* For products other than those listed above or for custom items, please contact us.

Product Designations

Series Name		Poles	Operational-part Type	Switch Functions	Current Capacity	Type of Terminals	Contact Materials
F	X		P	D	0	1	

Poles	Symbol
1	(none)
2	(none)
3	3
4	4

Operational-part	Symbol
Pushbutton	P
Splash-proof Pushbutton	M

Contact Materials	Symbol
Silver Alloy	(none)
Gold Plating	G

* For use with micro-currents, please select gold-plated contacts. Silver contacts may result in unstable performance at low currents, as oxidation or sulfide films on the surface are not removed by arcing.

Switch Functions			Symbol	
Initial Position	Center	When the Button is pushed	SP 3P	DP 4P
ON	-	ON	D	N
ON	-	<ON>	F	R

< > = Momentary

Type of Terminals	Symbol
Solder Lug	1
PCB Terminal	3

Shape of Operational-part	Symbol
Standard Pushbutton	0
Large Pushbutton	1

* For Splash-proof type, only 0 is availabe.

Silhouette（FXPD01）

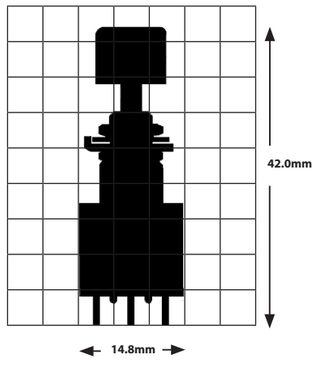

Silhouette（FXPD11）

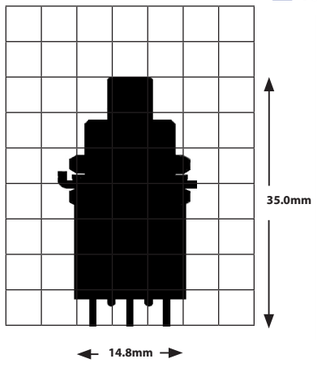

■ Terminal Dimensions F X P/M

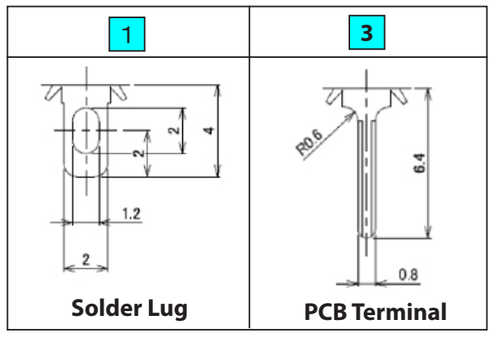

* For products other than those listed above or for custom items, please contact us.

Switch Names, Functions, Terminal Diagram

Standard Pushbutton SP Solder Lug

F X ☐ P ☐ 0 1 ☐

Product Name	Circuit	Functions <> = Momentary	
FXPD01	SPDT	Alternate	
		ON 2-3 or ON 2-1	
FXPF01	SPDT	Momentary	
		Initial Position	When the Button is pressed
		ON 2-3	‹ON› 2-1

■ Shape of Operational-part

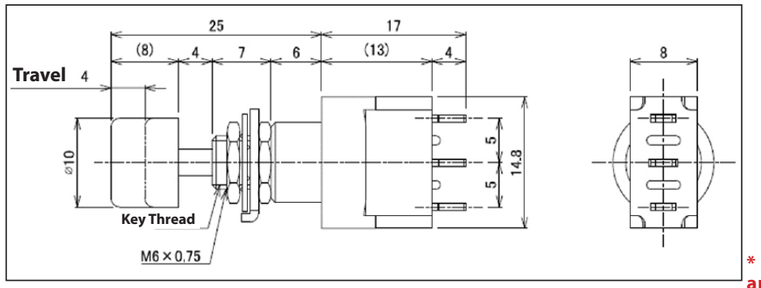

■ Terminal Diagram

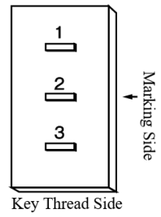

*** Terminal Numbers are not indicated on the case.**

Standard Pushbutton 2P Solder Lug

F X ☐ P ☐ 0 1 ☐

Product Name / Solder Lug	Circuit	Functions <> = MomentaryR	
FXPN01	DPDT	Alternate	
		ON 2-3 5-6 or ON 2-1 5-4	
FXPR01	DPDT	Momentary	
		Initial Position	When the Button is pressed
		ON 2-3 5-6	‹ON› 2-1 5-4

■ Shape of Operational-part

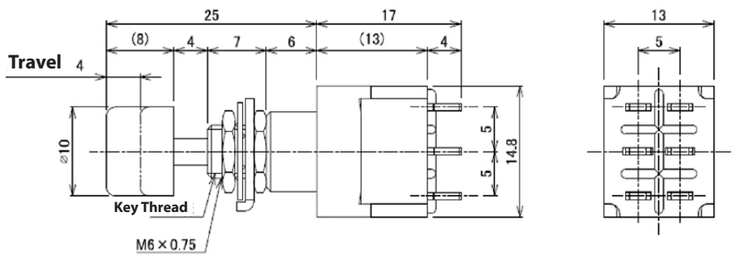

■ Terminal Diagram

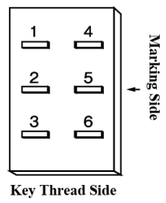

*** Terminal Numbers are not indicated on the case.**

* For products other than those listed above or for custom items, please contact us.

Standard Pushbutton 3P Solder Lug

F X 3 P ☐ 0 1 ☐

Product Name	Circuit	Functions <> = Momentary	
FX3PD01	3PDT	Alternate	
		ON 2-3 5-6 8-9 or ON 2-1 5-4 8-7	
FX3PF01	3PDT	Momentary	
		Initial Position	When the Button is pressed
		ON 2-3 5-6 8-9	‹ON› 2-1 5-4 8-7

■ Shape of Operational-part

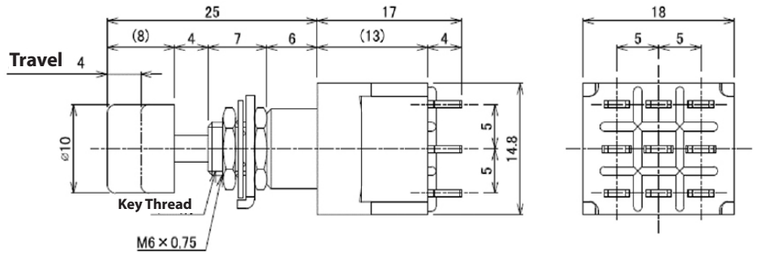

■ Terminal Diagram

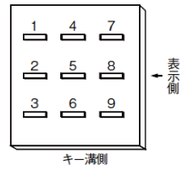

*** Terminal Numbers are not indicated on the case.**

Standard Pushbutton 4P Solder Lug

F X 4 P ☐ 0 1 ☐

Product Name	Circuit	Functions <> = Momentary	
FX4PN01	4PDT	Alternate	
		ON 2-3 5-6 8-9 11-12 or ON 2-1 5-4 8-7 11-10	
FX4PR01	4PDT	Momentary	
		Initial Position	When the Button is pressed
		ON 2-3 5-6 8-9 11-12	‹ON› 2-1 5-4 8-7 11-10

■ Shape of Operational-part

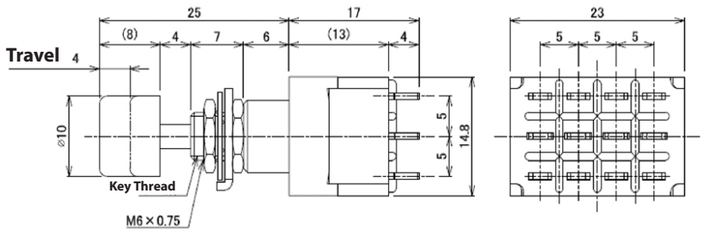

■ Terminal Diagram

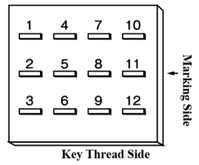

*** Terminal Numbers are not indicated on the case.**

* For products other than those listed above or for custom items, please contact us.

Standard Pushbutton PCB Terminal（Terminal-part only）

F X ☐ P ☐ 0 3 ☐

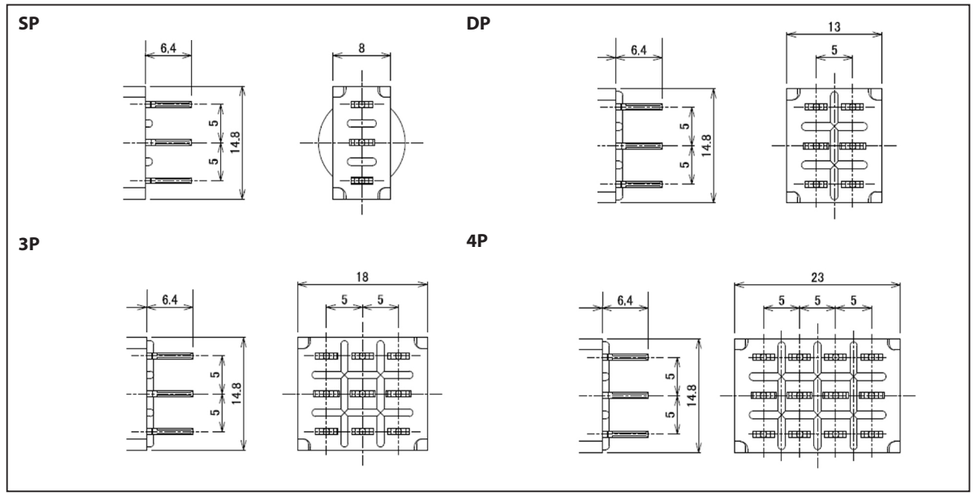

■ Dimensions of Mounting Holes for PCB

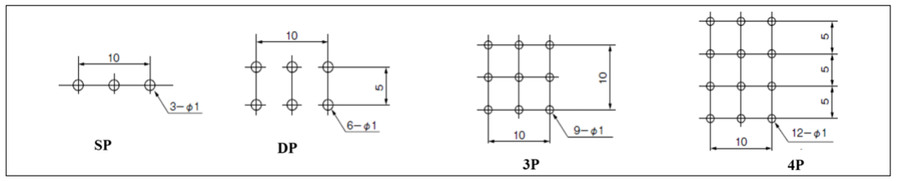

Splash-proof Pushbutton Solder Lug

F X ☐ M ☐ 0 1 ☐

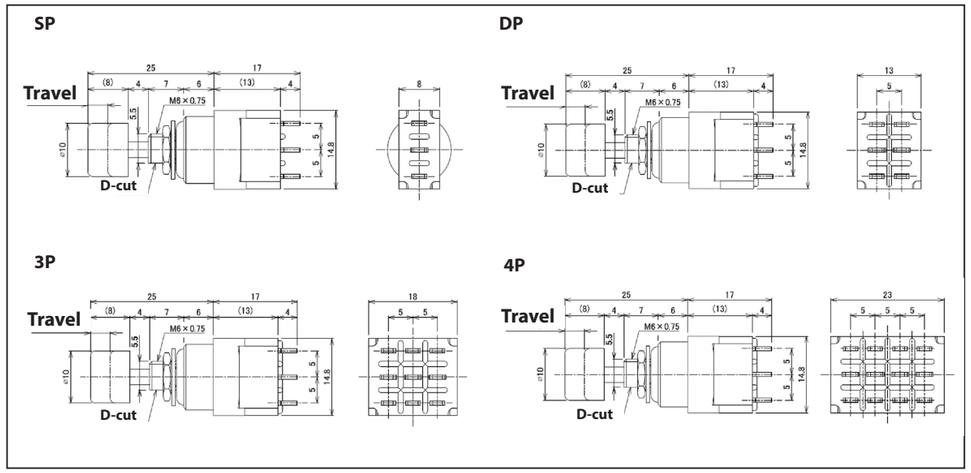

* Regarding the dimensions of PCB Terminals, please refer to those for Standard Pushbutton.

* For products other than those listed above or for custom items, please contact us.

Large Pushbutton Solder Lug

F X ☐ M ☐ 1 1 ☐

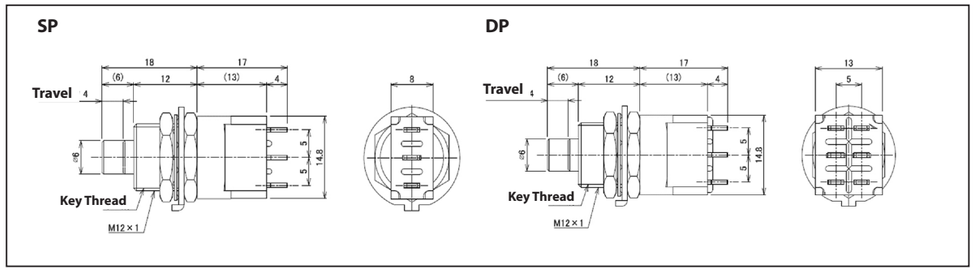

* Regarding the dimensions of PCB Terminals, please refer to those for Standard Pushbutton.

Mounting Hole Dimensions, Mounting Parts Dimensions

■ Mounting Hole Dimensions（Standard Button/ Splash-proof Button）

With Stopper Ring（Non Splash-proof Type）

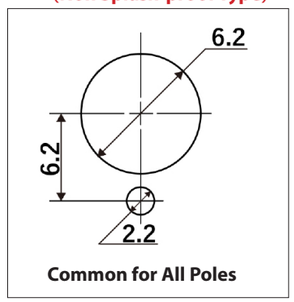

Common for All Poles

Withoyt Stopper Ring（Non Splash-proof Type）

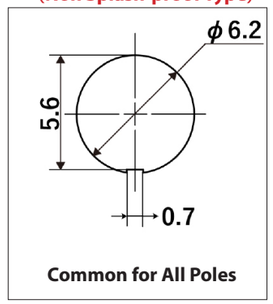

Common for All Poles

D-cut（Splash-proof）

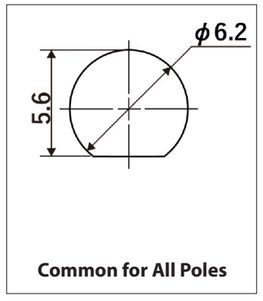

Common for All Poles

■ Mounting Parts Dimensions/ Mounting Method

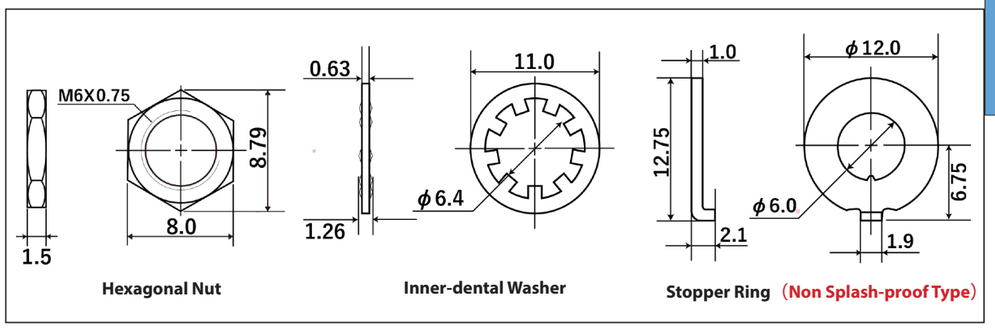

Mounting Method (Splash-proof)

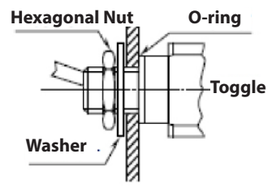

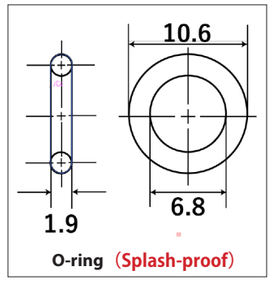

O-ring（Splash-proof）

* For products other than those listed above or for custom items, please contact us.

Pushbutton
FX Series
250V/125VAC 6A
Solder Lug PCB Terminal
SP 2P 3P 4P

Mounting Hole Dimensions（Large Pushbutton）

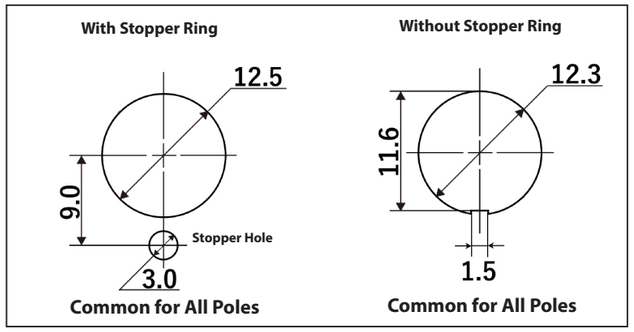

Mounting Parts Dimensions（Large Toggle）

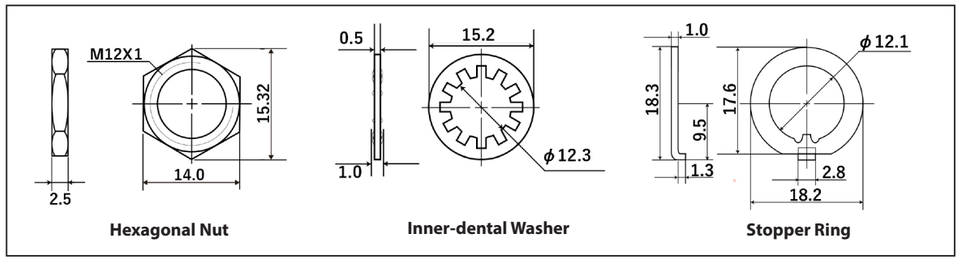

* For non-splash-proof models, only the lower nut is pre-installed on the main unit; other accessories are included separately.

Switches for Logic-Level Currents

Switches rated for several amperes typically use silver (or silver alloy) contacts.
While these contacts are generally reliable at higher currents, over time oxidation or sulfide buildup can increase contact resistance.
At logic-level currents—typically just a few milliamperes—the arc generated during switching is insufficient to remove such films, potentially leading to contact failure.
For such applications, we recommend switches with gold-plated contacts, designed specifically for low-current logic circuits.

Examples of Switches with Gold Plating Contacts（Left: NTD12、Right: FXTN01G）

Pushbutton
FX Series
250V/125VAC 6A
Solder Lug PCB Terminal
SP 2P 3P 4P

Rotary

J Series

DC20V 0.4VA

PCB Terminal

1Cir.12 Cont.
2Cir. 6 Cont.
3 Cir. 4 Cont.
4 Cir. 3 Cont.

Outline of the Series

1. Ultra-compact rotary switch for PCB applications.
2. The contact section uses gold-over-nickel plating with a self-cleaning wiping action, ensuring stable contact even at low currents.
3. Terminals are insert-molded to create a completely sealed structure, preventing flux intrusion.
4. The JRA type features an externally adjustable stopper, allowing the number of detent positions to be set as desired.
5. The JRE type is equipped with an O-ring to prevent water intrusion from the top of the panel.

Common Specifications

■ Ratings

Voltage	Ratings	Load	Notes
DC20V	0.4VA	Resistive Load	Load only with Resistive, Power Factor=1

* A resistive load refers to a load consisting solely of resistance. In actual circuits, however, there may be inductive, capacitive, or motor loads, each of which can generate inrush current. Therefore, when selecting a switch, be sure to choose a rating with sufficient margin above the steady-state current.
For more details, please refer to "Useful Advices and Precautions on Usage of Operational Switches."

Contact Resistance	100 mΩ Max. (DC2V 1A) (Initial value)
Withstanding Voltage	AC500V 1 Minute
Insulating Resistance	100MΩ Min. (DC500V)
Electrical Life	10,000 times
Operating Temperature Range	-20℃～ +70℃
Storage Temperature Range	-20℃～ +70℃
Flow-soldering Conditions	270℃ Max. within 5 sec.
Operatinf Force	98mN·m MAX

Packaging Quantity
25 pcs/Case x 40Case = 1,000 pcs

■ PCBMounting Hole Dimensions（common for all Circuits/ Contacts）

Silhouette（JRA1-12）

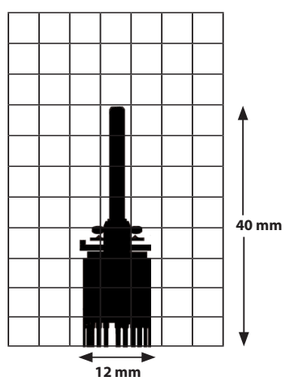

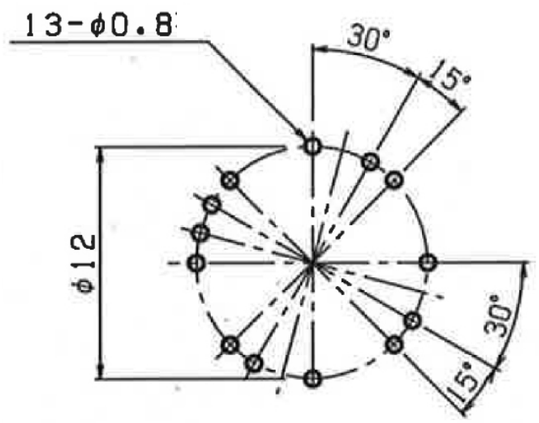

* For products other than those listed above or for custom items, please contact us.

Product Designations

Series Name: J

Type Name: R A

Number of Circuits – Number of Contacts: 1 – 12

Type Name	Symbol
Standard Type	RA
Splash-proof Type	RE

Number of Circuits	Number of Contacts	Symbol
1	12	1-12
2	6	2-6
3	4	3-4
4	3	4-3

■ Relation Diagram between Circuit and Contacts (as seen from the bottom of the Switch.)

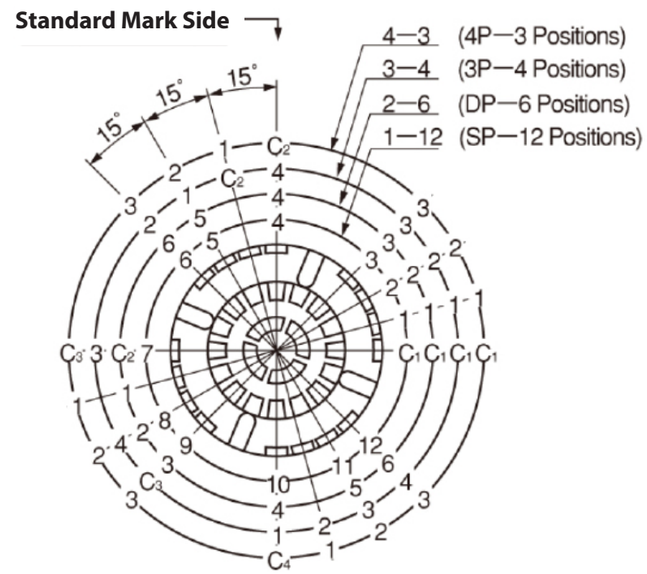

Standard Dimensions

Standard Type（JRA □ - □）

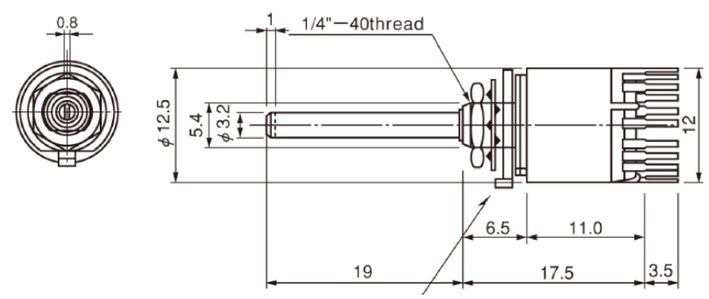

Standard Mark Side

How to set JRAType's variable stopper

1. Insert the stopper at the reference mark position.
2. Rotate the shaft counterclockwise until it reaches the stopper position.
3. Insert the second stopper into the hole that is two positions beyond the desired number of contact points.
[Example] For 1–6 positions, insert the first stopper at the reference mark and place the second stopper at the 8th position clockwise.
Note: Two stoppers are included for positions 1–12.
* If a specific number of stop positions is required, please contact us.

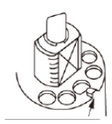

Standard Mark Side

* For products other than those listed above or for custom items, please contact us.

Rotary
J Series
DC20V 0.4VA
PCB Terminal
1Cir.12 Cont.
2Cir. 6 Cont.
3 Cir. 4 Cont.
4 Cir. 3 Cont.

Splash-proof Type（JRE □ - □）

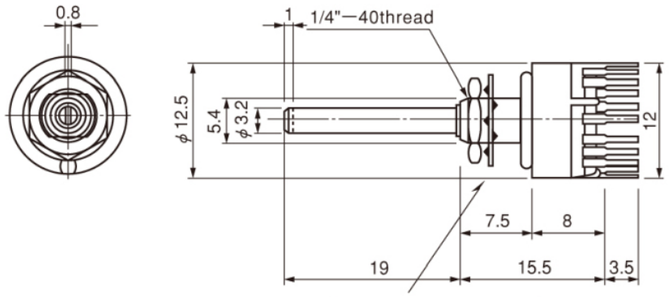

Standard Mark Side

Accessories, Mounting Hole Dimensions, Mounting Parts Dimensions

■ Knob

Aluminum Knurring Finish (Black)
Indicator Line: White
Parts Number: 68254907

Aluminum Knurring Finish (Silver)
Indicator Line: Black
Parts Number: 68254908

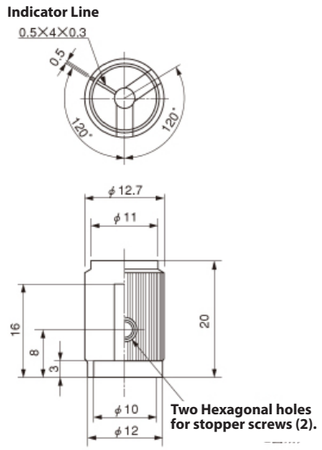

For the assembly of aluminum Knurring, please use a hexgonal wrenth #6-32UNC.

■ Mounting Hole Dimensions

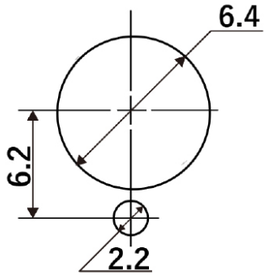

With Stopper Ring

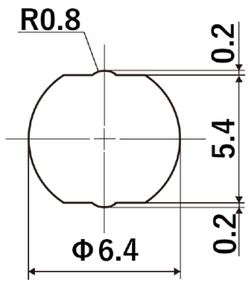

Without Stopper Ring
(For Spalash-proof)

* For products other than those listed above or for custom items, please contact us.

■ Mounting Parts Dimensions

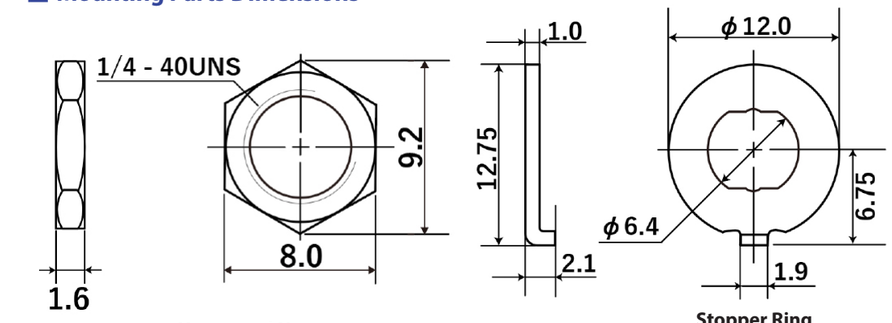

Hexagonal Nut

Stopper Ring
(For Non-spalash-proof)

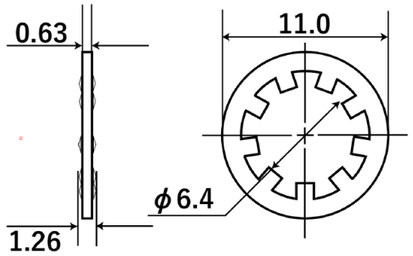

Inner-dental Washer

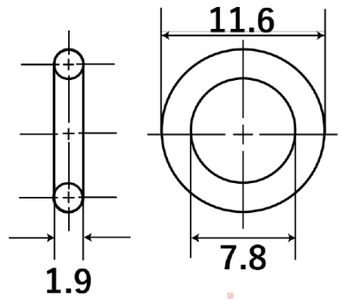

O-ring
(For Spalash-proof)

Compliance with the European RoHS Directive

All DIP switches, control switches, connectors, and terminal blocks manufactured by OTAX with the following RoHS Directive:

Directive 2011/65/EU of the European Parliament and of the Council on the restriction of the use of certain hazardous substances in electrical and electronic equipment (RoHS).

Our products do not contain any of the ten specified hazardous substances (except for exempted applications):

Lead (Pb) Mercury (Hg) Cadmium (Cd) Hexavalent chromium (Cr^{6+}) Polybrominated biphenyls (PBB)

Polybrominated diphenyl ethers (PBDE) Di(2-ethylhexyl) phthalate (DEHP) Butyl benzyl phthalate (BBP)

Dibutyl phthalate (DBP) Diisobutyl phthalate (DIBP)

* For products other than those listed above or for custom items, please contact us.

Rotary
J Series
DC20V 0.4VA
PCB Terminal
1Cir.12 Cont.
2Cir. 6 Cont.
3 Cir. 4 Cont.
4 Cir. 3 Cont.

Rocker

L Series

250V/125VAC
20A
16A
10A

Quick Connect Terminal #250

SP 2P

Outline of the Series

This snap-in rocker switch is ideal for power switching applications, supporting ratings up to 20A and also available in illuminated versions with neon lamps.

Features of the Series

1. Snap-in mounting allows for quick and easy installation.
2. Illuminated types are available with neon lamps and three actuator color options.
3. Despite its slim profile, it supports ratings up to 20A.
4. The LL □ 55 type is UL, cUL, and TÜV certified.

Common Specifications

Ratings

Symbol / Voltage	Non-illuminated 15	Non-illuminated 35	Non-illuminated 55	Neon Lamp Illuminated 15	Neon Lamp Illuminated 25	Neon Lamp Illuminated 35	Neon Lamp Illuminated 45	Load	Notes
AC125V	10A	16A	20A	10A		16A		Resistive Load	Load only with Resistive, Power Factor=1
AC250V	10A	16A	20A		10A		16A		

* A resistive load refers to a load consisting solely of resistance. In actual circuits, however, there may be inductive, capacitive, or motor loads, each of which can generate inrush current. Therefore, when selecting a switch, be sure to choose a rating with sufficient margin above the steady-state current.

For more details, please refer to "Useful Advices and Precautions on Usage of Operational Switches."

Packaging Quantity	
SP	100 pcs
DP	50 pcs

Silhouette（LLD15C1）

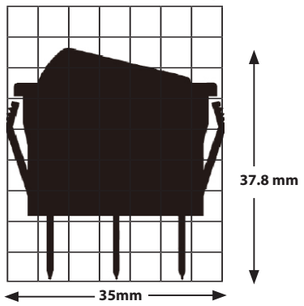

Contact Resistance	20 mΩ Max. (DC2V 1A) (Initial value)
Withstanding Voltage	AC1,500V 1 Minute
Insulating Resistance	1,000MΩ Min. (DC500V)
Electrical Life	10,000 times
Operating Temperature Range	-20℃～ +70℃
Storage Temperature Range	-20℃～ +70℃
Hand-soldering Conditions	350 ± 3℃ within 3 sec.
Life of Neon Lamp	20,000 hours

* For products other than those listed above or for custom items, please contact us.

Product Designations

Non-illuminated Type

Series Name	Operational-part Type	Switch Functions	Current Capacity	Type of Terminals	Shape of Operational-part	Color of Operational-part	Operational-part Indication
L	L	A	1	5	C	1	1

Operational-part	Symbol
Rocker	L

Current Capacity	Symbol
10A 125/250V AC	1
16A 125/250V AC	3
20A 125/250V AC	5

Shape of Operational-part	Symbol
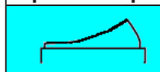 Curved Shape	C

Operational-part Indication	Symbol
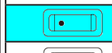	1
	2
	3
	4
No Mark	(none)

Note: For symbol "2", the current ON/OFF status is indicated on the side of the actuator. For symbols "3" and "4", the marking indicates the ON/OFF status when that side is pressed. ("I" or "-" indicates ON, and " ○ " indicates OFF.)

Switch Functions			Symbol	
Left Push	Center	Right Push	SP	DP
ON	-	OFF	A	K
ON	-	ON	D	N

Type of Terminals	Symbol
Quick Connect #250	5

SP

DP

Color of Operational-part	Symbol
Black	1
Red	2

Neon Lamp Illuminated Type

Series Name	Operational-part Type	Switch Functions	Current Capacity	Type of Terminals	Shape of Operational-part	Color of Operational-part
L	L	A	1	5	L	1

Operational-part	Symbol
Rocker	L

Current Capacity	Symbol
10A 125V AC	1
10A 250V AC	2
16A 125V AC	3
16A 250VAC	4

Shape of Operational-part	Symbol
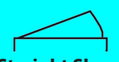 Straight Shape	L

SwitchFunctions			Symbol	
Left Push	Center	Right Push	SP	DP
ON	-	OFF	A	K

Type of Terminals	Symbol
Quick Connect #250	5

Color of Operational-part	Symbol
Orange Transparent	1
Red Transparent	2
Green Transparent	3

Examples of Terminal Figures（SP/ DP）

SP

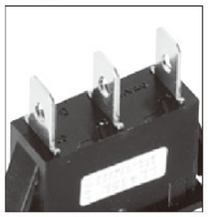

DP

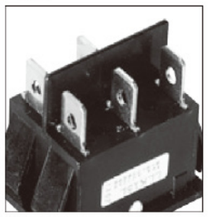

SP

DP

* For products other than those listed above or for custom items, please contact us.

Rocker

L Series

250V/125VAC
20A
16A
10A

Quick Connect Terminal #250

SP 2P

Rocker

L Series

250V/125VAC
20A
16A
10A

Quick Connect Terminal #250

SP 2P

Switch Names, Functions, Terminal Diagram

Non-illuminated Type

S P

Product Name	Resistive Load AC125/250V	Circuit	Functions		
LLA15C □	10A	SPST	ON 2-3	—	OFF
LLD15C □	10A	SPDT	ON 2-3	—	ON 2-1
LLA35C □	16A	SPST	ON 2-3	—	OFF
LLD35C □	16A	SPDT	ON 2-3	—	ON 2-1
LLA55C □	20A	SPST	ON 2-3	—	OFF
LLD55C □	20A	SPDT	ON 2-3	—	ON 2-1

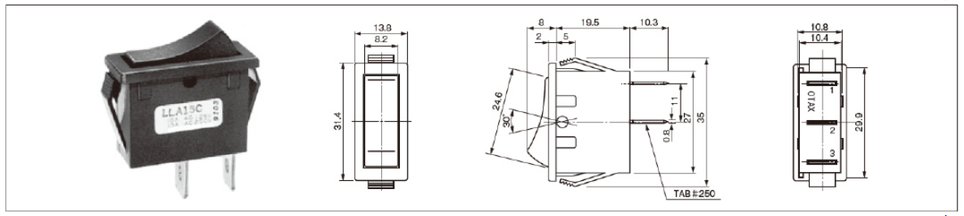

2 Poles

Product Name	Resistive Load AC125/250V	Circuit	Functions		
LLK15 □□	10A	DPST	ON 2-3 5-6	—	OFF
LLN15 □□	10A	DPDT	ON 2-3 5-6	—	ON 2-1 5-4
LLK35 □□	16A	DPST	ON 2-3 5-6	—	OFF
LLN35 □□	16A	DPDT	ON 2-3 5-6	—	ON 2-1 5-4
LLK55 □□	20A	DPST	ON 2-3 5-6	—	OFF
LLN55 □□	20A	DPDT	ON 2-3 5-6	—	ON 2-1 5-4

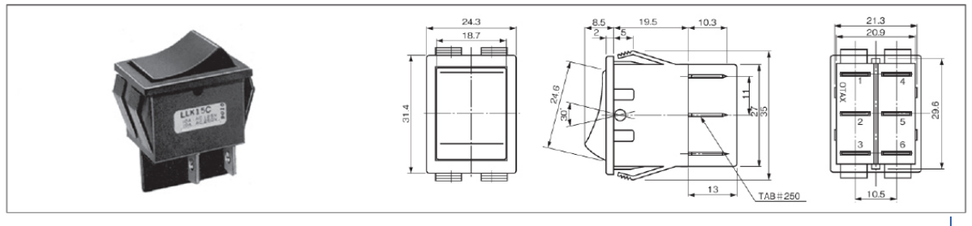

Mounting Hole Dimensions（Both for Non-illuminated and Illuminated）

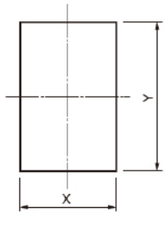

	Panel Thickness	X	Y
SP	1.0~3.0	$10.9^{+0.1}_{0}$	$30.0^{+0.1}_{0}$
DP	1.0~3.0	$21.4^{+0.1}_{0}$	$30.0^{+0.1}_{0}$

*** For products other than those listed above or for custom items, please contact us.**

Rocker

L Series

250V/125VAC
20A
16A
10A

Quick Connect Terminal #250

SP 2P

Neon Lamp Illuminated Type

S P

Product Name	Resistive Load	Circuit	Functions		
LLA15L □	AC125V/10A	SPST	ON 2-3	—	OFF
LLA25L □	AC250V/10A	SPST	ON 2-3	—	OFF
LLA35L □	AC125V/16A	SPST	ON 2-3	—	OFF
LLA45L □	AC250V/16A	SPST	ON 2-3	—	OFF

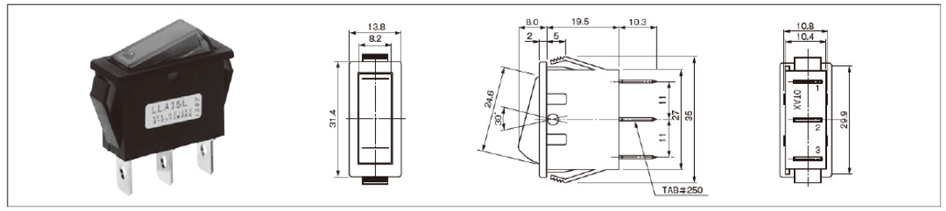

D P

Product Name	Resistive Load	Circuit	Functions		
LLK15L □	AC125V/10A	DPST	ON 2-3 5-6	—	OFF
LLK25L □	AC250V/10A	DPST	ON 2-3 5-6	—	OFF
LLK35L □	AC125V/16A	DPST	ON 2-3 5-6	—	OFF
LLK45L □	AC250V/16A	DPST	ON 2-3 5-6	—	OFF

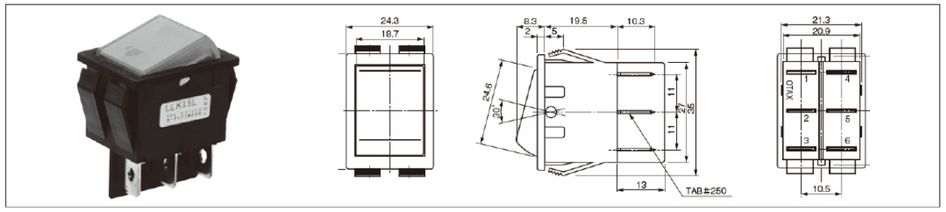

Wiring Diagrams

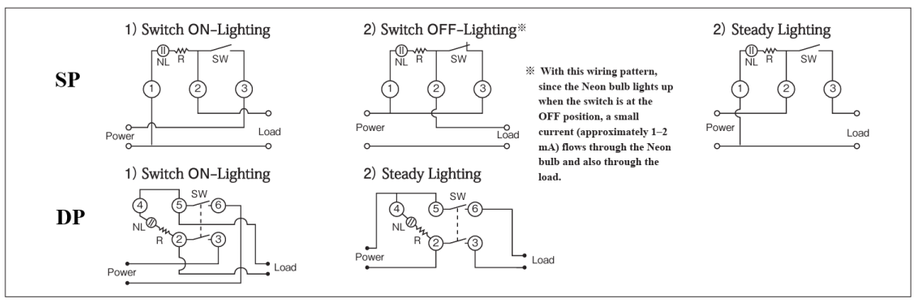

*** For products other than those listed above or for custom items, please contact us.**

Compliance with the European RoHS Directive

All DIP switches, control switches, connectors, and terminal blocks manufactured by OTAX with the following RoHS Directive:

Directive 2011/65/EU of the European Parliament and of the Council on the restriction of the use of certain hazardous substances in electrical and electronic equipment (RoHS).

Our products do not contain any of the ten specified hazardous substances (except for exempted applications):

Lead (Pb) Mercury (Hg) Cadmium (Cd) Hexavalent chromium (Cr^{6+}) Polybrominated biphenyls (PBB) Polybrominated diphenyl ethers (PBDE) Di(2-ethylhexyl) phthalate (DEHP) Butyl benzyl phthalate (BBP) Dibutyl phthalate (DBP) Diisobutyl phthalate (DIBP)

Cautions on Handling

1. Snap-in mounting should be performed only once.
2. Neon lamps may misfire due to electromagnetic interference, so please take care with their placement.

Switch Tips

Cautions on Capacitive Load

Many modern electronic devices use switching power supplies. Inside these power supplies, a large capacitor is typically placed immediately after the rectifier circuit, which presents a capacitive load—one of the most demanding types of loads from the perspective of a switch.
Similarly, the power supplies used in the increasingly popular LED lighting systems also often present a capacitive load.

For this reason, please pay close attention to inrush current during switch operation and select a switch with an appropriate current rating.
If large inrush currents are expected, we recommend using switching power supplies with built-in inrush current limiting circuits, or referring to the "Useful Advices and Precautions on Usage of Operational Switches" for various methods of limiting inrush current.

If switches are used under high inrush current conditions without any protective measures, there is a risk that the switch contacts may weld together, potentially leading to serious failure or accidents.

Capacitive Load	Since capacitors draw large currents when first energized, high-level inrush currents are generated.	10–1000 times the steady-state current in microseconds to milliseconds	Switching power supplies (capacitors in the primary power circuit), LED lighting	(Measure the actual inrush current and select an appropriately rated switch. Consider an inrush current reduction circuit.)

Toggle

N Series

0.4VA Max. AC/DC 28V Max.

PCB Terminal Straight Vertical Horizontal

SP 2P

Outline of the Series

This is an ultra-compact switch series designed exclusively for printed circuit boards, available in toggle, rocker, and push-button types.

Features of the Series

1. The occupied PCB area is just 31.5 mm² with straight terminals, enabling highly space-efficient mounting.
2. The sealed construction allows for full-board washing with flux-cleaning solvents.
3. The terminal pitch conforms to the standard 2.54 mm PCB spacing, and square terminals are used.
4. Three terminal types—straight, vertical, and horizontal—are available, allowing flexible mounting orientations.

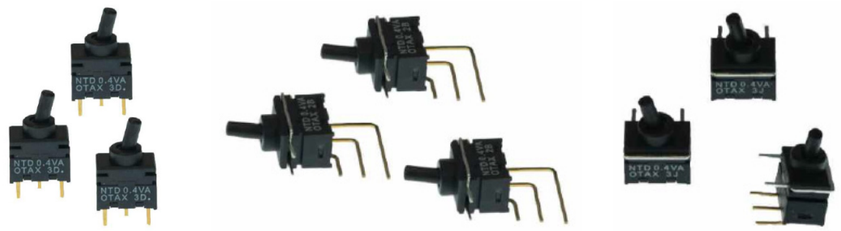

Common Specifications

■ Ratings

Voltage	Ratings	Load	Note
AC/DC 28V Max.	0.4VA Max.	Resistive Load	Load only with Resistive, Power Factor=1

* A resistive load refers to a load consisting solely of resistance. In actual circuits, however, there may be inductive, capacitive, or motor loads, each of which can generate inrush current. Therefore, when selecting a switch, be sure to choose a rating with sufficient margin above the steady-state current.
For more details, please refer to "Useful Advices and Precautions on Usage of Operational Switches."

Contact Resistance	80 mΩ Max. (DC2V 10mA) (Initial value)
Withstanding Voltage	AC500V 1 Minute
Insulating Resistance	500MΩ Min. (DC500V)
Electrical Life	50,000 times ～ 100,000 times
Operating Temperature Range	-20℃～ +80℃
Storage Temperature Range	-20℃～ +80℃
Hand-soldering Conditions	400℃ within 4±1 sec.
Flow Soldering Conditions	265±5℃ within 10 sec.

Packaging Quantity	
PCB Straight	100 pcs
PCB Vertical	50 pcs
PCB Horizontal	25 pcs

Specifications of Materials	
Part Name	Materials
Case	PPS
Lever	PPS
Frame	PA
Insulation Bar	PEI
Fixed Plate (Fixed Contact)	Copper Alloy
Movable Plate (Movable Contact)	Copper Alloy
Coil Spring	Piano Wire

* For products other than those listed above or for custom items, please contact us.

Product Designations

Series Name	Operational-part Type	Switch Functions	Type of Terminals	
N	T	D	1	2

Operational-part	Symbol
Toggle	T

SwitchFunctions			Symbol	
The Opposite Side	Center	Key Thread Side	SP	DP
ON	-	ON	D	N
ON	OFF	ON	E	P
ON	-	<ON>	F	R
<ON>	OFF	<ON>	G	S
ON	OFF	<ON>	H	T

< > = Momentary

Type of Terminals	Symbol
PCB Straight Terminal	12
PCB Vertical Terminal	22
PCB Horizontal Terminal	32

* Type of Terminals Symbol is not indicated on the body.

■ Examples of Terminal Figures (SP/ DP, ON-ON)

PCB Straight
(DP ON-ON)

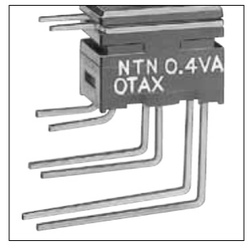

PCB Vertical
(DP ON-ON)

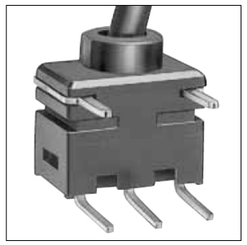

PCB Horizontal
(SP ON-ON)

Silhouette (NTD12)

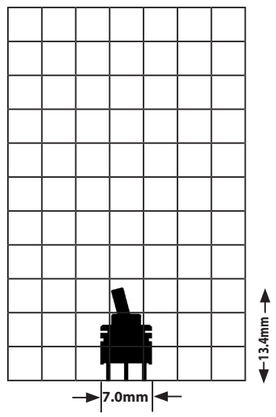

* For products other than those listed above or for custom items, please contact us.

Toggle
N Series
0.4VA Max. AC/DC 28V Max.
PCB Terminal Straight Vertical Horizontal
SP 2P

Switch Names, Functions, Terminal Diagram, PCB Holes Diagram

PCB Straight Terminal

Product Name	Circuit	Functions <> = Momentary		
NTD12	SPDT	ON 2-3	—	ON 2-1
NTE12	SPDT	ON 2-3	OFF	ON 2-1
NTF12	SPDT	ON 2-3	—	ON 2-1
NTG12	SPDT	<ON>2-3	OFF	<ON>2-1
NTH12	SPDT	<ON>2-3	OFF	ON 2-1

Product Name	Circuit	Functions <> = Momentary		
NTN12	DPDT	ON 2-3 5-6	—	ON 2-1 5-4
NTP12	DPDT	ON 2-3 5-6	OFF	ON 2-1 5-4
NTR12	DPDT	ON 2-3 5-6	—	ON 2-1 5-4
NTS12	DPDT	<ON> 2-3 5-6	OFF	<ON> 2-1 5-4
NTT12	DPDT	<ON> 2-3 5-6	OFF	ON 2-1 5-4

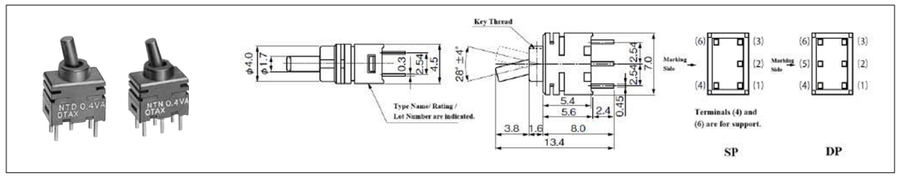

* Terminal numbers are not indicated on the case.。

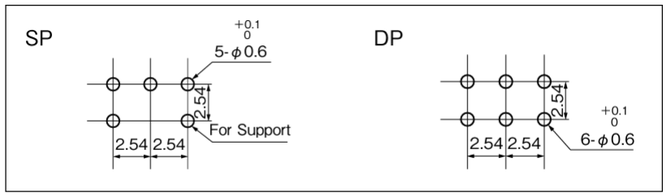

❖ The Case is common both for SP and DP.

PCB Vertical Terminal

Product Name	Circuit	Functions <> = Momentary		
NTD22	SPDT	ON 2-3	—	ON 2-1
NTE22	SPDT	ON 2-3	OFF	ON 2-1
NTF22	SPDT	ON 2-3	—	ON 2-1
NTG22	SPDT	<ON>2-3	OFF	<ON>2-1
NTH22	SPDT	<ON>2-3	OFF	ON 2-1

Product Name	Circuit	Functions <> = Momentary		
NTN22	DPDT	ON 2-3 5-6	—	ON 2-1 5-4
NTP22	DPDT	ON 2-3 5-6	OFF	ON 2-1 5-4
NTR22	DPDT	ON 2-3 5-6	—	ON 2-1 5-4
NTS22	DPDT	<ON> 2-3 5-6	OFF	<ON> 2-1 5-4
NTT22	DPDT	<ON> 2-3 5-6	OFF	ON 2-1 5-4

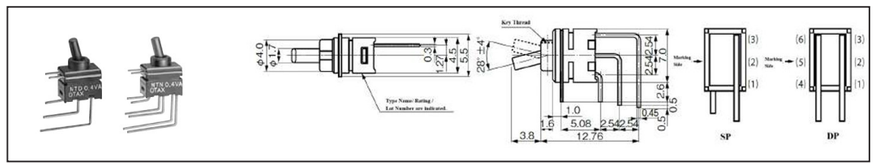

* Terminal numbers are not indicated on the case.。

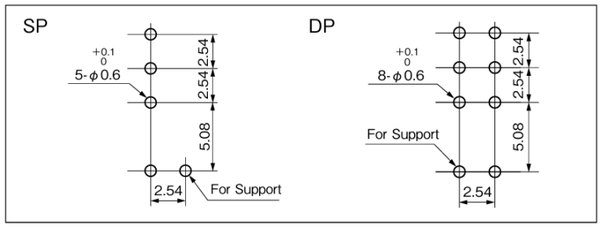

❖ The Case is common both for SP and DP.

PCB Horizontal Terminal

Product Name	Circuit	Functions <> = Momentary		
NTD32	SPDT	ON 2-3	—	ON 2-1
NTE32	SPDT	ON 2-3	OFF	ON 2-1
NTF32	SPDT	ON 2-3	—	ON 2-1
NTG32	SPDT	<ON>2-3	OFF	<ON>2-1
NTH32	SPDT	<ON>2-3	OFF	ON 2-1

Product Name	Circuit	Functions <> = Momentary		
NTN32	DPDT	ON 2-3 5-6	—	ON 2-1 5-4
NTP32	DPDT	ON 2-3 5-6	OFF	ON 2-1 5-4
NTR32	DPDT	ON 2-3 5-6	—	ON 2-1 5-4
NTS32	DPDT	<ON> 2-3 5-6	OFF	<ON> 2-1 5-4
NTT32	DPDT	<ON> 2-3 5-6	OFF	ON 2-1 5-4

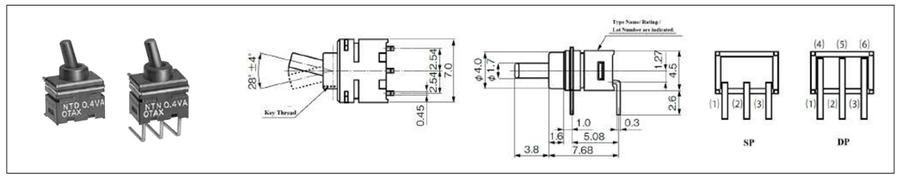

* Terminal numbers are not indicated on the case.。

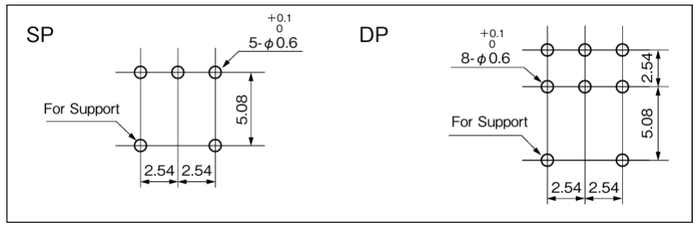

❖ The Case is common both for SP and DP.

Cautions on Handling

1. Alcohol-based cleaning agents can be used.
2. Thanks to the sealed construction, full-board washing is possible; however, please verify the cleaning conditions in advance under your actual usage environment.

Compliance with the European RoHS Directive

All DIP switches, control switches, connectors, and terminal blocks manufactured by OTAX with the following RoHS Directive:

Directive 2011/65/EU of the European Parliament and of the Council on the restriction of the use of certain hazardous substances in electrical and electronic equipment (RoHS).

Our products do not contain any of the ten specified hazardous substances (except for exempted applications):

Lead (Pb) Mercury (Hg) Cadmium (Cd) Hexavalent chromium (Cr^{6+}) Polybrominated biphenyls (PBB) Polybrominated diphenyl ethers (PBDE) Di(2-ethylhexyl) phthalate (DEHP) Butyl benzyl phthalate (BBP) Dibutyl phthalate (DBP) Diisobutyl phthalate (DIBP)

Pushbutton

N Series

0.4VA Max. AC/DC 28V Max.

PCB Terminal Straight Vertical Horizontal

SP 2P

Outline of the Series

This is an ultra-compact switch series designed exclusively for printed circuit boards, available in toggle, rocker, and push-button types.

Features of the Series

1. The occupied PCB area is just 31.5 mm² with straight terminals, enabling highly space-efficient mounting.
2. The sealed construction allows for full-board washing with flux-cleaning solvents.
3. The terminal pitch conforms to the standard 2.54 mm PCB spacing, and square terminals are used.
4. Three terminal types—straight, vertical, and horizontal—are available, allowing flexible mounting orientations.

With an optional Button

Common Specifications

■ Ratings

Voltage	Ratings	Load	Note
AC/DC 28V Max.	0.4VA Max.	Resistive Load	Load only with Resistive, Power Factor=1

* A resistive load refers to a load consisting solely of resistance. In actual circuits, however, there may be inductive, capacitive, or motor loads, each of which can generate inrush current. Therefore, when selecting a switch, be sure to choose a rating with sufficient margin above the steady-state current.
For more details, please refer to "Useful Advices and Precautions on Usage of Operational Switches."

Contact Resistance	80 mΩ Max. (DC2V 10mA) (Initial value)
Withstanding Voltage	AC500V 1 Minute
Insulating Resistance	500MΩ Min. (DC500V)
Electrical Life	50,000 times ※ ON-<ON>Type is 10,000 times
Operating Temperature Range	-20℃～ +80℃
Storage Temperature Range	-20℃～ +80℃
Hand-soldering Conditions	400℃ within 4±1 sec.
Flow Soldering Conditions	265±5℃ within 10 sec.

Packaging Quantity	
PCB Straight Terminal	100 pcs
PCB Vertical Terminal	50 pcs
PCB Horizontal Terminal	25 pcs

Specifications of Materials	
Part Name	Materials
Case	PPS
Operational-part	PPS
Frame	PA
Fixed Plate (Fixed Contact)	Copper Alloy
Movable Plate (Movable Contact)	Copper Alloy
Coil Spring	Piano Wire
Button	PA

* For products other than those listed above or for custom items, please contact us.

Product Designations

Series Name	Operational-part Type	Switch Functions	Type of Terminals	
N	P	C	1	2

Operational-part	Symbol
Pushbutton	P

SwitchFunctions			Symbol	
Initial Position		When the button is pushed	SP	DP
OFF	-	<ON>	C	M
ON	-	<ON>	F	

< > = Momentary

Type of Terminals	Symbol
PCBStraight Terminal	12
PCBVertical Terminal	22
PCBHorizontal Terminal	32

* Type of Terminals Symbol is not indicated on the body.

Optional Button	
Black	9805-8494

* Inquire us if you require colors except black.

■ Examples of Terminal Figures

PCB Straight Terminal
(DP OFF-<ON>)

PCB Vertical Terminal
(DP OFF-<ON>)

PCB Horizontal Terminal
(SP OFF-<ON>)

Silhouette (NPC12)

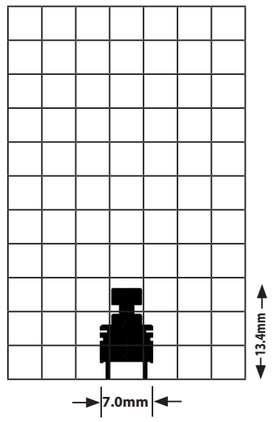

* For products other than those listed above or for custom items, please contact us.

Pushbutton

N Series

0.4VA Max. AC/DC 28V Max.

PCB Terminal Straight Vertical Horizontal

SP 2P

Switch Names, Functions, Terminal Diagram, PCB Holes Diagram

PCB Straight Terminal

Product Name	Circuit	Functions <> = Momentary	
		Initial Position	When the button is pushed
NPC12	SPST	OFF	<ON> 3-1
NPF12	SPDT	ON 2-3	<ON> 2-1

Product Name	Circuit	Functions <> = Momentary	
		Initial Position	When the button is pushed
NPM12	2 PolesST	OFF	<ON> 3-1 6-4

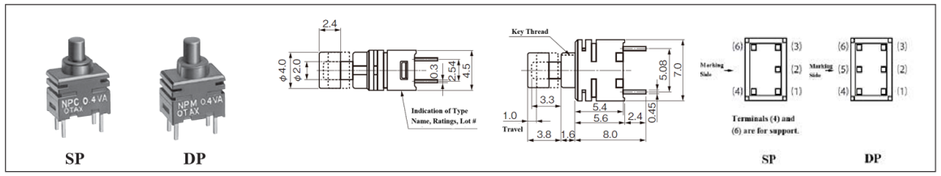

❖ Terminal Numbers are not displayed on the case.

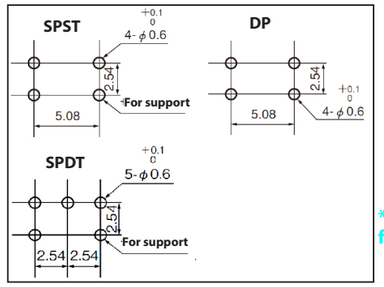

* The case is common both for SP and DP.

PCB Vertical Terminal

Product Name	Circuit	Functions <> = Momentary	
		Initial Position	When the button is pushed
NPC22	SPST	OFF	<ON> 3-1
NPF22	SPDT	ON 2-3	<ON> 2-1

Product Name	Circuit	Functions <> = Momentary	
		Initial Position	When the button is pushed
NPM22	2 PolesST	OFF	<ON> 3-1 6-4

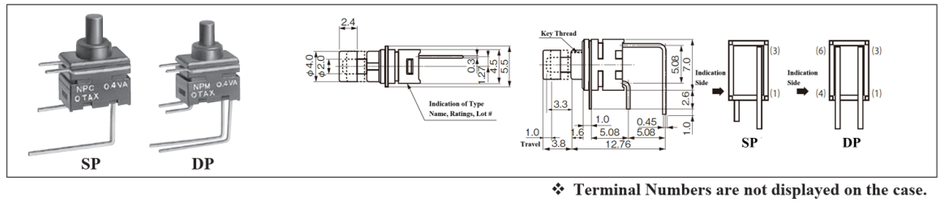

❖ Terminal Numbers are not displayed on the case.

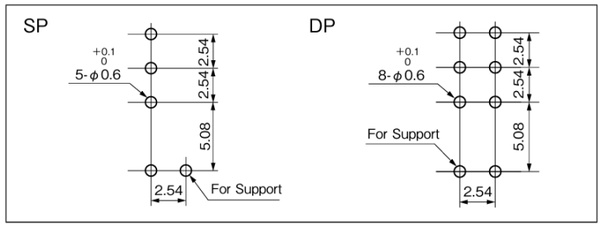

❖ The Case is common both for SP and DP.

* For products other than those listed above or for custom items, please contact us.

PCB Horizontal Terminal

Product Name	Circuit	Functions <> = Momentary	
		Initial Position	When the button is pushed
NPC32	SPST	OFF	<ON> 3-1
NPF32	SPDT	ON 2-3	<ON> 2-1

Product Name	Circuit	Functions <> = Momentary	
		Initial Position	When the button is pushed
NPM32	2 PolesST	OFF	<ON> 3-1 6-4

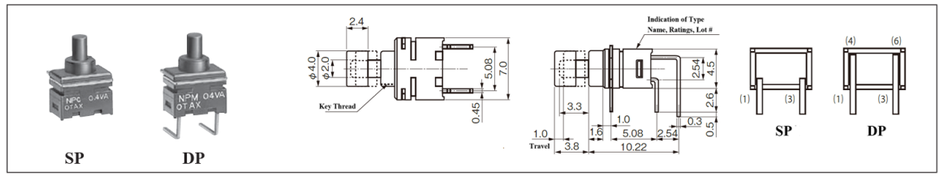

❖ Terminal Numbers are not displayed on the case.

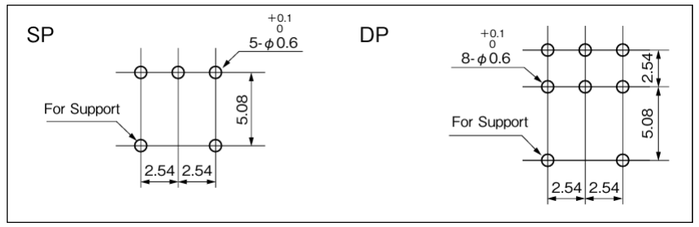

❖ The Case is common both for SP and DP.

Optional Button

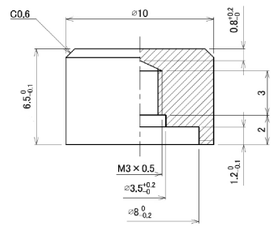

Cautions on Handling

1. Alcohol-based cleaning agents can be used.
2. Thanks to the sealed construction, full-board washing is possible; however, please verify the cleaning conditions in advance under your actual usage environment.

Compliance with the European RoHS Directive

All DIP switches, control switches, connectors, and terminal blocks manufactured by OTAX with the following RoHS Directive:

Directive 2011/65/EU of the European Parliament and of the Council on the restriction of the use of certain hazardous substances in electrical and electronic equipment (RoHS).

Our products do not contain any of the ten specified hazardous substances (except for exempted applications):

Lead (Pb) Mercury (Hg) Cadmium (Cd) Hexavalent chromium (Cr^{6+}) Polybrominated biphenyls (PBB) Polybrominated diphenyl ethers (PBDE) Di(2-ethylhexyl) phthalate (DEHP) Butyl benzyl phthalate (BBP) Dibutyl phthalate (DBP) Diisobutyl phthalate (DIBP)

* For products other than those listed above or for custom items, please contact us.

Pushbutton
N Series
0.4VA Max. AC/DC 28V Max.
PCB Terminal Straight Vertical Horizontal
SP 2P

Rocker

T Series

250VAC 10A 125VAC 10A

Quick Connect Terminal #250

SP 2P

Outline of the Series

This is a combination snap-in rocker switch rated for 10A, integrated with a fuse holder. Illuminated versions with neon lamps are also available.

Features of the Series

1. The built-in fuse holder allows for space-saving around the power circuit.
2. Snap-in mounting enables quick and easy installation.
3. Illuminated versions are available, combining a neon lamp with three actuator color options.

Common Specifications

■ Ratings

Voltage \ Symbol	15	25	Load	Notes
AC125V	10A	—	Resistive Load	Load only with Resistive, Power Factor=1
AC250V	—	10A		

* A resistive load refers to a load consisting solely of resistance. In actual circuits, however, there may be inductive, capacitive, or motor loads, each of which can generate inrush current. Therefore, when selecting a switch, be sure to choose a rating with sufficient margin above the steady-state current.

For more details, please refer to "Useful Advices and Precautions on Usage of Operational Switches."

Packaging Quantity
50 pcs

■ About Fuse

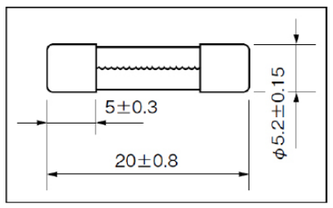

- Nominal dimensions: Φ5.2 × 20 mm
  Terminal type: Cartridge (cap type)
  Rated current: Max. 10A
- It is recommended to use the fuse at no more than 60–70% of its rated current.
- The appropriate fuse varies depending on the current used; please select a suitable fuse accordingly.
- *The fuse is not included at the time of delivery.*

Silhouette（TLD15C1）

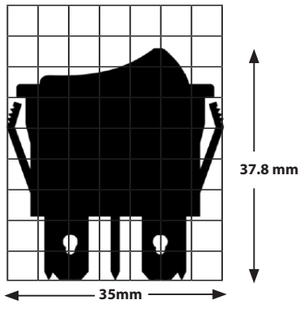

Contact Resistance	20 mΩ Max. (DC2 ～ 4V 1A) (Initial value)
Withstanding Voltage	AC1,500V 1 Minute
Insulating Resistance	1,000MΩ Min. (DC500V)
Electrical Life	10,000 times
Operating Temperature Range	-20℃～ +70℃
Storage Temperature Range	-20℃～ +70℃
Hand-soldering Conditions	350 ± 3℃ within 3 sec.
Life of Neon Lamp	20,000 hours

* For products other than those listed above or for custom items, please contact us.

Product Designations

■ Non-illuminated Type

Series Name	Operational-part Type	Switch Functions	Current Capacity	Type of Terminals	Shape of Operational-part	Color of Operational-part
T	L	A	1	5	C	1

Operational-part	Symbol
Snap-in Rocker	L

Current Capacity	Symbol
10A 125V AC	1
10A 250V AC	2

Shape of Operational-part	Symbol
Curved Shape	C

SwitchFunctions			Symbol	
Left Push	Center	Right Push	SP	DP
ON	-	OFF	A	K
ON	-	ON	D	N

Type of Terminals	Symbol
Quick Connect #250	5

Color of Operational-part	Symbol
Black	1
Red	2

SP

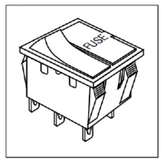

DP

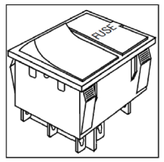

■ Neon Lamp Illuminated Type

Series Name	Operational-part Type	Switch Functions	Current Capacity	Type of Terminals	Shape of Operational-part	Color of Operational-part
T	L	A	1	5	L	1

Operational-part	Symbol
Snap-in Rocker	L

Current Capacity	Symbol
10A 125V AC	1
10A 250V AC	2

Shape of Operational-part	Symbol
Straight Shape	L

SwitchFunctions			Symbol	
Left Push	Center	Right Push	SP	DP
ON	-	OFF	A	K

Type of Terminals	Symbol
Quick Connect #250	5

Color of Operational-part	Symbol
Orange Transparent	1
Red Transparent	2
Green Transparent	3

SP

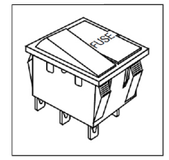

DP

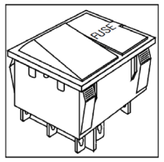

* Color of Operational-part is not indicated on the body.

■ Examples of Terminal Figures（SP/ DP）

SP（ON-OFF、Illuminated）

DP（ON-OFF、Illuminated）

* For products other than those listed above or for custom items, please contact us.

Rocker

T Series

250VAC 10A 125VAC 10A

Quick Connect Terminal #250

SP 2P

Rocker

T Series

250VAC 10A 125VAC 10A

Quick Connect Terminal #250

SP 2P

Switch Names, Functions, Terminal Diagram

Non-illuminated Type

S P

Product Name	Resistive Load AC125V	Product Name	Resistive Load AC250V	Circuit	Functions		
TLA15 □□	10A	TLA25 □□	10A	SPST	ON 2-3	—	OFF
TLD15 □□	10A	TLD25 □□	10A	SPDT	ON 2-3	—	ON 2-1

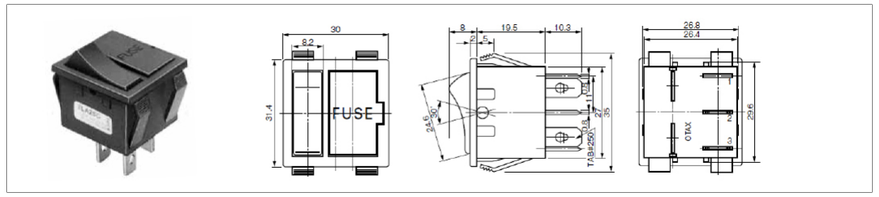

D P

Product Name	Resistive Load AC125V	Product Name	Resistive Load AC250V	Circuit	Functions		
TLK15 □□	10A	TLK25 □□	10A	DPST	ON 2-3 5-6	—	OFF
TLN15 □□	10A	TLN25 □□	10A	DPDT	ON 2-3 5-6	—	ON 2-1 5-4

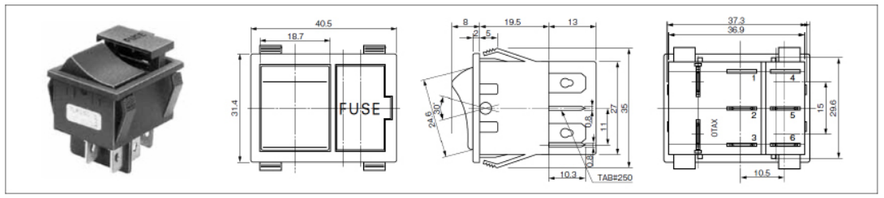

Mounting Hole Dimensions（Both for Non-illuminated and Illuminated）

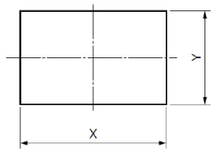

	Panel Thickness	X	Y
SP	1.0～3.0	$26.9^{+0.1}_{0}$	$30.0^{+0.1}_{0}$
DP	1.0～3.0	$37.4^{+0.1}_{0}$	$30.0^{+0.1}_{0}$

* For products other than those listed above or for custom items, please contact us.

Neon Lamplluminated Type

S P

Product Name	Resistive Load AC125V	Product Name	Resistive Load AC250V	Circuit	Functions		
TLA15L □	10A	TLA25L □	10A	SPST	ON 2-3	—	OFF

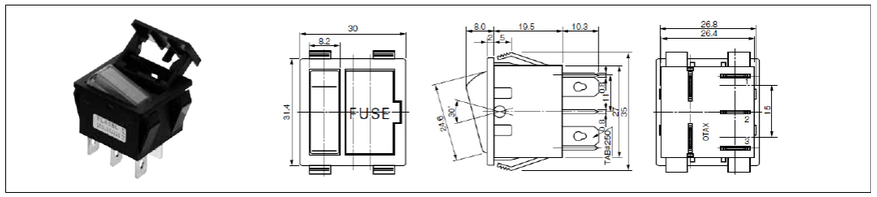

D P

Product Name	Resistive Load AC125V	Product Name	Resistive Load AC250V	Circuit	Functions		
TLK15L □	10A	TLK25L □	10A	DPST	ON 2-3 5-6	—	OFF

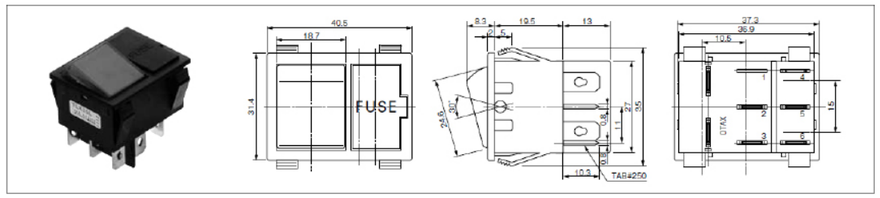

Wiring Diagrams

* Always turn off the switch before replacing the fuse.

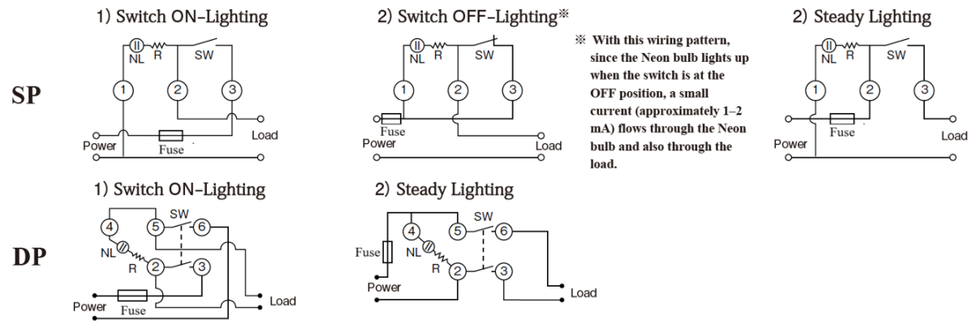

※ With this wiring pattern, since the Neon bulb lights up when the switch is at the OFF position, a small current (approximately 1–2 mA) flows through the Neon bulb and also through the load.

* For products other than those listed above or for custom items, please contact us.

Compliance with the European RoHS Directive

All DIP switches, control switches, connectors, and terminal blocks manufactured by OTAX with the following RoHS Directive:

Directive 2011/65/EU of the European Parliament and of the Council on the restriction of the use of certain hazardous substances in electrical and electronic equipment (RoHS).

Our products do not contain any of the ten specified hazardous substances (except for exempted applications):

Lead (Pb) Mercury (Hg) Cadmium (Cd) Hexavalent chromium (Cr^{6+}) Polybrominated biphenyls (PBB) Polybrominated diphenyl ethers (PBDE) Di(2-ethylhexyl) phthalate (DEHP) Butyl benzyl phthalate (BBP) Dibutyl phthalate (DBP) Diisobutyl phthalate (DIBP)

Cautions on Handling

1. Snap-in mounting should be performed only once.
2. Neon lamps may misfire due to electromagnetic interference, so please take care with their placement.

Switch Tips

Cautions on Capacitive Load

Many modern electronic devices use switching power supplies. Inside these power supplies, a large capacitor is typically placed immediately after the rectifier circuit, which presents a capacitive load—one of the most demanding types of loads from the perspective of a switch.
Similarly, the power supplies used in the increasingly popular LED lighting systems also often present a capacitive load.

For this reason, please pay close attention to inrush current during switch operation and select a switch with an appropriate current rating.
If large inrush currents are expected, we recommend using switching power supplies with built-in inrush current limiting circuits, or referring to the "Useful Advices and Precautions on Usage of Operational Switches" for various methods of limiting inrush current.

If switches are used under high inrush current conditions without any protective measures, there is a risk that the switch contacts may weld together, potentially leading to serious failure or accidents.

Capacitive Load	Since capacitors draw large currents when first energized, high-level inrush currents are generated.	10–1000 times the steady-state current in microseconds to milliseconds	Switching power supplies (capacitors in the primary power circuit), LED lighting	(Measure the actual inrush current and select an appropriately rated switch. Consider an inrush current reduction circuit.)

Rocker

V
Series

250V/125VAC
10A
6A
3A

Solder Lug
PCB Terminal
Quick Connect
Terminal

SP 2P

Outline of the Series

This is a compact snap-in rocker switch rated up to 10A, also available in LED spot illumination and dustproof types.

Features of the Series

1. Snap-in mounting allows for quick and easy installation.
2. Space-saving design with a minimum panel cutout size of 19.2 × 12.9 mm for single-pole models.
3. LED spot illumination type is available.
4. A dust-tight version is offered to prevent malfunction caused by foreign particles in factory or industrial environments.

Common Specifications

■ Ratings

Voltage \ Symbol	51, 53, 54	04	14	Load	Note
AC125V AC250V	10A	6A	3A	Resistive Load	Load only with Resistive, Power Factor=1

* A resistive load refers to a load consisting solely of resistance. In actual circuits, however, there may be inductive, capacitive, or motor loads, each of which can generate inrush current. Therefore, when selecting a switch, be sure to choose a rating with sufficient margin above the steady-state current.

For more details, please refer to "Useful Advices and Precautions on Usage of Operational Switches."

Packaging Quantity	
VLA04・14 VLD04・14 VLK51・53	400 pcs
Others	200 pcs

Silhouette（VLK51）

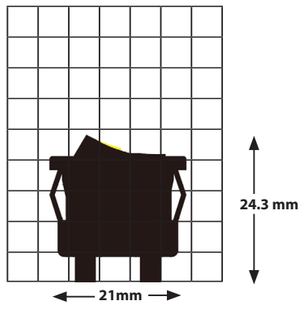

Contact Resistance	20 mΩ Max. (DC2V 1A) (Initial value)
Withstanding Voltage	AC1,500V 1 Minute
Insulating Resistance	1,000MΩ Min. (DC500V)
Electrical Life	10,000 times
Operating Temperature Range	-20℃～+70℃
Storage Temperature Range	-20℃～+70℃
Hand-soldering Conditions	350 ± 3℃ within 3 sec.

* For products other than those listed above or for custom items, please contact us.

Product Designations

Standard Type

Series Name	Operational-part Type	Switch Functions	Current Capacity	Type of Terminals	Details of Terminal Operational-part Indication
V	L	A	0	4	-61

Operational-part	Symbol
Rocker	L

Switch Functions			Symbol	
Left-push	Center	Right-push	SP	DP
ON	-	OFF	A	K
ON	-	ON	D	

Current Capacity	Symbol
6A 125/250V AC	0
3A 125/250V AC	1
10A 125/250V AC	5

※ DP is with 10A only, SP is with 6A/3A only.

Type of Terminals	Symbol
Solder Lug	1
PCB Terminal	3
Quick Connect #187	4

* SP is for Quick Connect #187 only.

Details of terminal	Indication	Symbol
Solder Lug	Side I ○	-
Solder Lug	White Dot	-60
Solder Lug	Upper I ○	-62
PCB Terminal（Right-angle）	Side I ○	-
PCB Terminal（Right-angle）	White Dot	-60
PCB Terminal（Right-angle）	Upper I ○	-62
PCB Terminal（Left-angle）	Side I ○	-18
PCB Terminal（Left-angle）	White Dot	-19
PCB Terminal（Left-angle）	Upper I ○	-67
PCB Terminal（Straight）	Side I ○	-17
PCB Terminal（Straight）	White Dot	-97
PCB Terminal（Straight）	Upper I ○	-68
Quick Connect #187（SP）	White Dot	-60
Quick Connect #187（SP）	Side I ○	-61
Quick Connect #187（SP）	Upper I ○	-62
Quick Connect I#187（DP）	Upper I ○	-46
Quick Connect t#187（DP）	No indication	-48

※ SP is for -60、-61、-62 of Quick Connect #187 only.

Dust-tight Type

Series Name	Operational-part Type	Switch Functions	Current Capacity	Type of Terminals	Operational-part Indication	Color of Operational-part
V	L	A	0	4	A	1

Operational-part	Symbol
Rocker	L

Switch Functions			Symbol
Left-push	Center	Right-push	SP
ON	-	OFF	A

Current Capacity	Symbol
6A 125/250V AC	0

Type of Terminals	Symbol
Quick Connect Terminal#187	4

Operational-part Indication	Symbol
Side ○ I	A
White Dot	B
Upper I ○	C
No Indication	D

Color	Symbol
Black	1
Red	2

* The symbol of operational-part color is not displayed on the body.

* For Symbol A, the current ON/OFF status is indicated on the side of the actuator.
For Symbols C, the marking indicates the ON/OFF status that will result when that side is pressed. ("I" or "-" indicates ON, and " ○ " indicates OFF.)

Illuminated Type

Series Name	Operational-part Type	Switch Functions	Current Capacity	Type of Terminals	Illumination TYpe	Color of Operational-part or of LED
V	L	A	0	4	L	1

Operational-part	Symbol
Rocker	L

Current Capacity	Symbol
6A 125/250V AC	0

Illumination Type	Symbol
LED	L

Switch Functions			Symbol
Left-push	Center	Right-push	SP
ON	-	OFF	A

Type of Terminals	Symbol
Quick Connect Terminal#187	4

LED Color	Symbol
Amber	1
Red	2
Green	3

* For products other than those listed above or for custom items, please contact us.

Rocker
V
Series
250V/125VAC
10A
6A
3A
Solder Lug
PCB Terminal
Quick Connect
Terminal
SP 2P

Switch Names, Functions, Dimensions

Standard Snap-in

S P

Product Name	Resistive Load AC125/250V	Circuit	Functions		
VLA04-□□	6A	SPST	ON 2-3	—	OFF
VLD04-□□	6A	SPDT	ON 2-3	—	ON 2-1
VLA14-□□	3A	SPST	ON 2-3	—	OFF
VLD14-□□	3A	SPDT	ON 2-3	—	ON 2-1

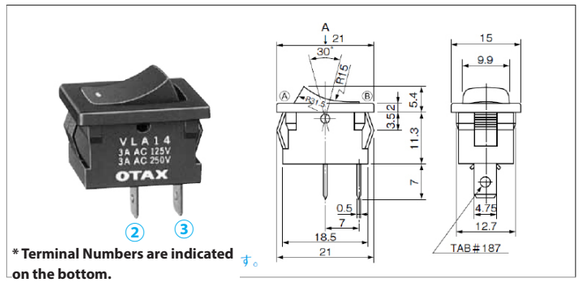

* Terminal Numbers are indicated on the bottom.

Examples of Operational-part Indication

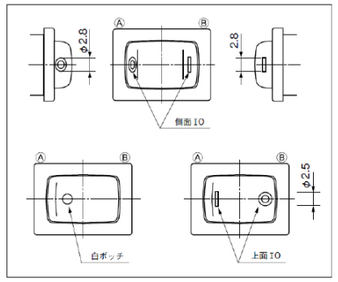

D P

Product Name	Resistive Load AC125/250V	Circuit	Functions		
VLK5□-□□	10A	DPST	ON 2-3 5-6	—	OFF

Solder Lug VLK51-□□

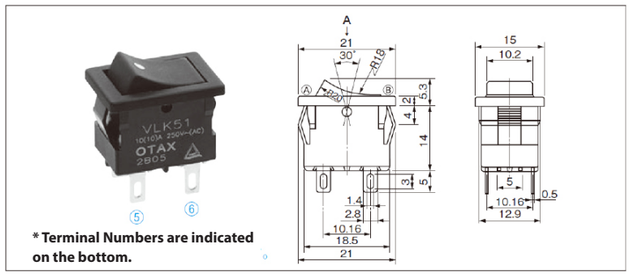

* Terminal Numbers are indicated on the bottom.

Examples of Operational-part Indication

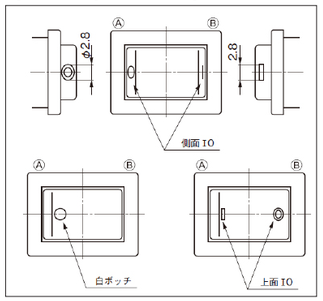

Quick Connect Terminal VLK54-□□

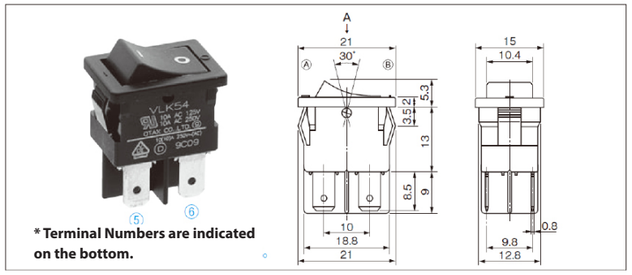

* Terminal Numbers are indicated on the bottom.

Mounting Hole Dimensions (All Types Common)

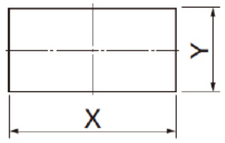

Panel Thickness	X	Y
0.75~1.25	$19.2^{0}_{-0.1}$	$12.9^{+0.1}_{0}$
1.25~2.00	$19.4^{0}_{-0.1}$	$12.9^{+0.1}_{0}$

* For products other than those listed above or for custom items, please contact us.

PCB Terminal VLK53-□□

Right-angle

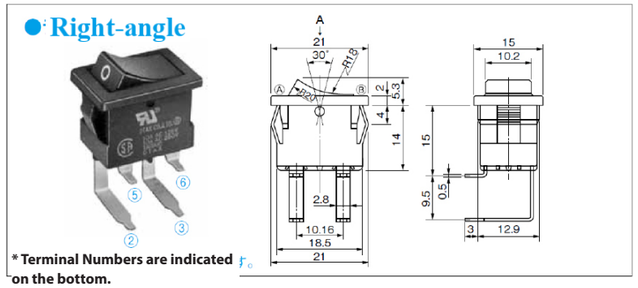

* Terminal Numbers are indicated on the bottom.

Left-angle

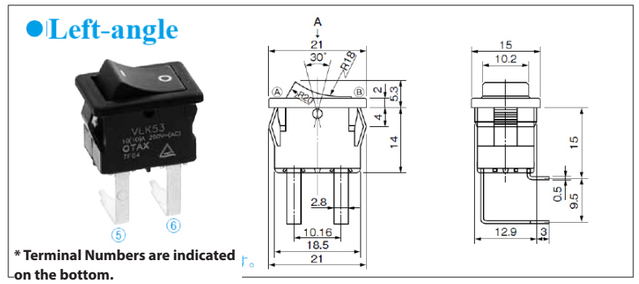

* Terminal Numbers are indicated on the bottom.

Straight

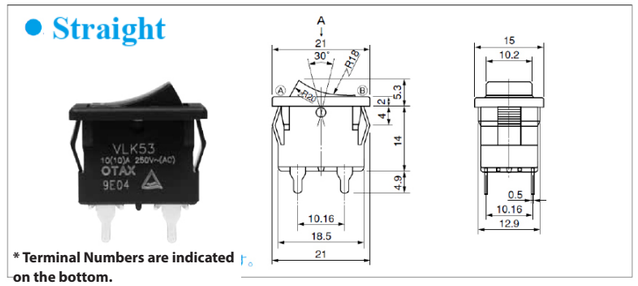

* Terminal Numbers are indicated on the bottom.

PCBMounting Hole Dimensions (Right-/ Left-angle)

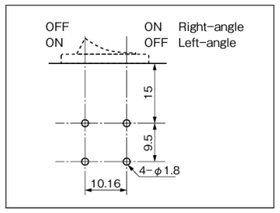

PCB Terminal Figure

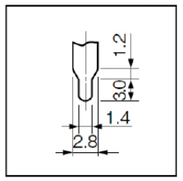

PCBMounting Hole Dimensions (Straight)

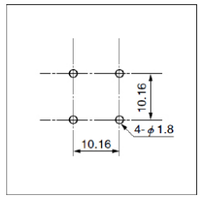

LED Illuminated VLA04L□

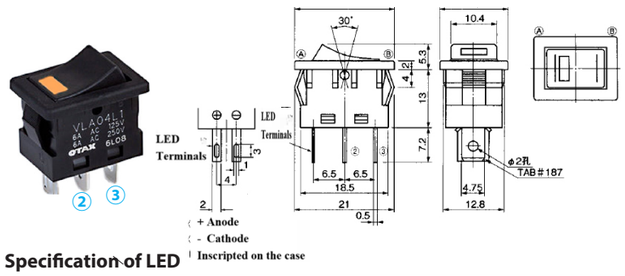

Specification of LED

		Absolute Maximum Ratings			Recommended Electric Conditions	
		Power Dissipation	Forward Current	Reverse Voltage	Forward Voltage	Forward Current
Light Color	Acronym	PD	IF	VR	VF(IF=20mA)	IF
	Unit	mW	mA	V	V	mA
Amber		125	50	4	2.10	20
Red		75	30	5	1.95	20
Green		75	30	5	2.10	20

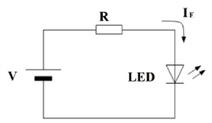

To achieve the desired forward current, please insert an appropriate ballast resistor or a constant current diode in series with the LED.
Formula for calculating the current-limiting resistor:
Resistor (Ω) = (Supply Voltage (V) – Recommended Forward Voltage (V)) / Recommended Forward Current (A)
For example, if the supply voltage is 5V, the recommended forward voltage is 2.1V, and the recommended forward current is 20mA, then:(5 – 2.1) / (20 / 1000) = 145Ω.

* For products other than those listed above or for custom items, please contact us.

Dust-tight VLA04□□

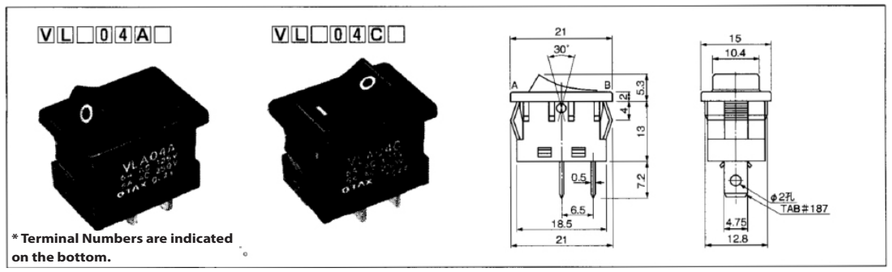

Examples of Operational-part indication

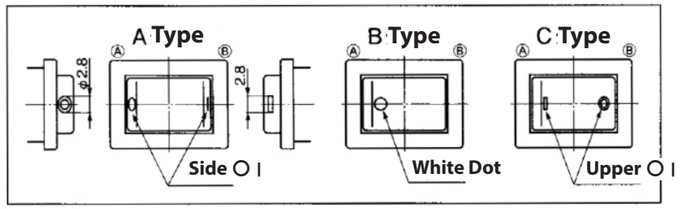

Splash-proof Cap

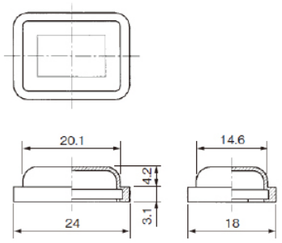

Materials	Color	Part Number
Silicone	Half-transparent	7847-B894

* For this accessary, pleae inquire us before the ordering.

Compliance with the European RoHS Directive

All DIP switches, control switches, connectors, and terminal blocks manufactured by OTAX with the following RoHS Directive:
Directive 2011/65/EU of the European Parliament and of the Council on the restriction of the use of certain hazardous substances in electrical and electronic equipment (RoHS).
Our products do not contain any of the ten specified hazardous substances (except for exempted applications):
Lead (Pb) Mercury (Hg) Cadmium (Cd) Hexavalent chromium (Cr^{6+}) Polybrominated biphenyls (PBB) Polybrominated diphenyl ethers (PBDE) Di(2-ethylhexyl) phthalate (DEHP) Butyl benzyl phthalate (BBP) Dibutyl phthalate (DBP) Diisobutyl phthalate (DIBP)

Cautions on Handling

1. Snap-in mounting should be performed only once.

Switch Tips

Cautions on Capacitive Load

Many modern electronic devices use switching power supplies. Inside these power supplies, a large capacitor is typically placed immediately after the rectifier circuit, which presents a capacitive load—one of the most demanding types of loads from the perspective of a switch.
Similarly, the power supplies used in the increasingly popular LED lighting systems also often present a capacitive load.

For this reason, please pay close attention to inrush current during switch operation and select a switch with an appropriate current rating.
If large inrush currents are expected, we recommend using switching power supplies with built-in inrush current limiting circuits, or referring to the "Useful Advices and Precautions on Usage of Operational Switches" for various methods of limiting inrush current.

If switches are used under high inrush current conditions without any protective measures, there is a risk that the switch contacts may weld together, potentially leading to serious failure or accidents.

Capacitive Load	Since capacitors draw large currents when first energized, high-level inrush currents are generated.	10–1000 times the steady-state current in microseconds to milliseconds	Switching power supplies (capacitors in the primary power circuit), LED lighting	(Measure the actual inrush current and select an appropriately rated switch. Consider an inrush current reduction circuit.)

Outline of the Series

FYI: This product is an example of customised miniature Slide Switch. Please inqure us if you have requests for similar products.

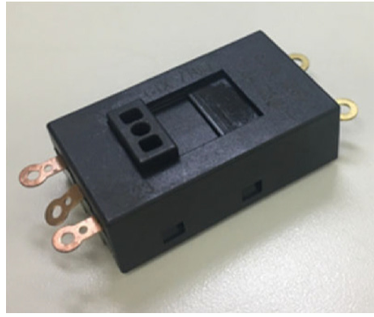

Common Specifications

■ Ratings

Voltage	Ratings	Load	Note
AC250V	7.5A	Resistive Load	Load only with Resistive, Power Factor=1
AC125V	13.5A		

* A resistive load refers to a load consisting solely of resistance. In actual circuits, however, there may be inductive, capacitive, or motor loads, each of which can generate inrush current. Therefore, when selecting a switch, be sure to choose a rating with sufficient margin above the steady-state current.
For more details, please refer to "Useful Advices and Precautions on Usage of Operational Switches."

Contact Resistance	30 mΩ Max. (DC2V 1A) (Initial value)
Withstanding Voltage	AC1,500V 1 Minute
Insulating Resistance	100MΩ Min. (DC500V)
Electrical Life	20,000 times
Operating Temperature Range	-10℃～ +75℃
Storage Temperature Range	-20℃～ +75℃
Operating Force	3.43 ～ 8.82N
Hand-soldering Conditions	320℃ Max. 4±1 sec.

* Certified by the Safety Standards TÜV and CQC.

* For products other than those listed above or for custom items, please contact us.

Product Designations

V S A 5 3 D

Specifications of Materials

Part Name	Materials	Finish
① Case	PBT	Black
② Cover	PBT	Black
③ Knob	PBT	Black
④ Dust-tight plate	PBT	Black
Clip spring	SUS	—
⑥ Fixed Plate	Copper Alloy	—
⑦ Movable Plate	Copper Alloy	—
Contacts	Silver Alloy	—

Standard Dimensions and Swich Functions

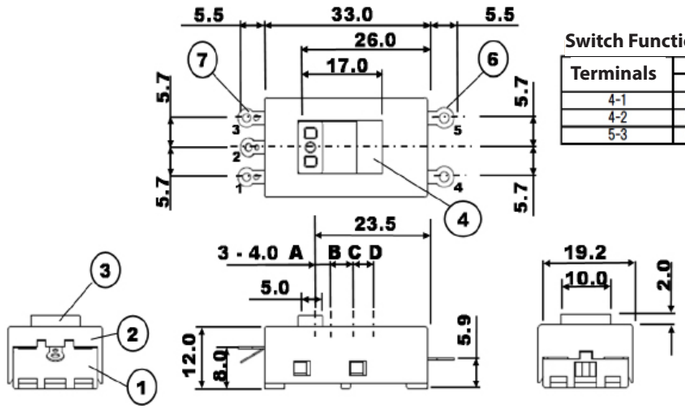

Switch Functions

Terminals	Knob Position A	B	C	D
4-1	OFF	ON	ON	ON
4-2	OFF	OFF	ON	ON
5-3	OFF	OFF	OFF	ON

* For products other than those listed above or for custom items, please contact us.

Slide
VSA Series
250VAC 7.5A 125VAC 13.5A
Solder Lug
Special Circuit
TÜV, CQC

Rocker

VZ Series

250V/125VAC 10A

Solder Lug
PCB Terminal
Quick Connect Terminal

SP 2P

cUL
VDE

Outline of the Series

These are 10A-rated dust-tight miniature snap-in rocker switches.

Features of the Series

1. Snap-in mounting allows for quick and easy installation.
2. The compact design features a minimum panel cutout size of 19.2 × 12.9 mm, identical to the V series.
3. Provides a crisp, tactile switching feel with a distinct click.
4. Dustproof type with an O-ring that prevents debris from entering the contact area.
5. Certified by cUL and VDE.

Common Specifications

Ratings

Voltage	Ratings	Load	Note
AC125V AC250V	10A	Resistive Load	Load only with Resistive, Power Factor=1

* A resistive load refers to a load consisting solely of resistance. In actual circuits, however, there may be inductive, capacitive, or motor loads, each of which can generate inrush current. Therefore, when selecting a switch, be sure to choose a rating with sufficient margin above the steady-state current.

For more details, please refer to "Useful Advices and Precautions on Usage of Operational Switches."

Specifications of Materials

Part Name	Materials	Finish
Button	PA66	Black
Frame	PA66	Black
Case	PBT(PPS)	Black
Movable Plate (Movable Contact)	Copper Alloy	Contact:Silver Alloy
Fixed Plate (Fixed Contact)	Copper Alloy	Contact:Silver Alloy
Common Terminals	Copper Alloy	—

Packaging Quantity
300 pcs

Silhouette (VZ22002200)

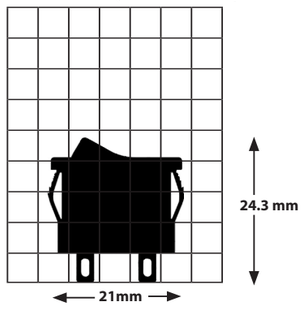

Contact Resistance	20 mΩ Max. (DC2 ～ 4V 1A) (Initial value)
Withstanding Voltage	AC1,500V 1 Minute
Insulating Resistance	1,000MΩ Min. (DC500V)
Electrical Life	10,000 times
Operating Force	DP：14.7N MAX SP：9.8N MAX
Operating Temperature Range	-25℃～ +85℃
Storage Temperature Range	-20℃～ +70℃
Hand-soldering Conditions	350 ± 3℃ within 3 sec.

* For products other than those listed above or for custom items, please contact us.

Product Designations

Series Name		Poles	Switch Functions	Current Capacity	(reserved)	Type of Terminals	Operational-part Indication	Body Color	Special Parts
V	Z	2	2	0	0	2	2	0	0

Poles	Symbol
SP	1
DP	2

Switch Functions	Symbol
ON – OFF	2

Current Capacity	Symbol
10A 125/250V AC	0

Operational-part Indication	Symbol
Side I ○	0
White Dot	1
Top ○ I	2
Top ○ –	3
None	4

Note: For symbol "0", the current ON/OFF status is indicated on the side of the actuator. For symbols 2 and 3, the marking indicates the ON/OFF status when that side is pressed. ("I" or "-" indicates ON, and "○" indicates OFF.)

Special Parts	Symbol
Standard	0
Solder Lug (SP2-3)	2
Solder Lug (SP5-6)	5

Terminal	Symbol
DP PC Terminal	1
Solder Lug	2
Quick Connect Terminal#187 (DP)	3
PCB Terminal (Straight, SP2-3)	C
PCB Terminal (Straight, SP5-6)	D
Quick Connect Terminal#187 (SP2-3)	G
Quick Connect Terminal#187 (SP5-6)	H

Body Color	Symbol
Black	0

Switch Names, Functions, Dimensions

Solder Lug

D P

Product Name	Resistive Load AC125/250V	Circuit	Functions		
VZ22002 □00	10A	DPST	ON 2-3 5-6	—	OFF

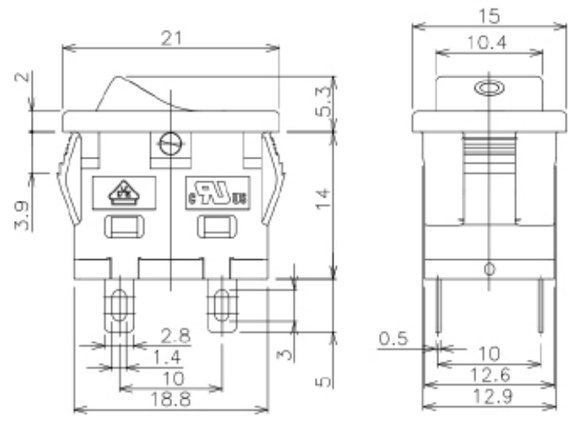

Marking Side

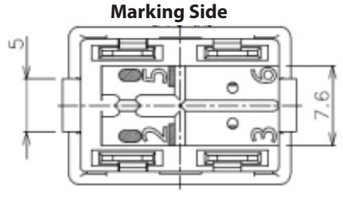

* For products other than those listed above or for custom items, please contact us.

Rocker

VZ Series

250V/125VAC 10A

Solder Lug
PCB Terminal
Quick Connect Terminal

SP 2P

cUL
VDE

Rocker

VZ Series

250V/125VAC 10A

Solder Lug
PCB Terminal
Quick Connect Terminal

SP 2P

cUL
VDE

S P

Product Name	Resistive Load AC125/250V	Circuit	Functions		
VZ12002 □02	10A	SPST	ON 2-3	—	OFF
VZ12002 □05	10A	SPST	ON 5-6	—	OFF

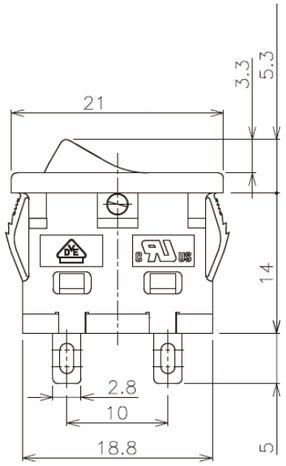

VZ12002202（Terminal 2-3）

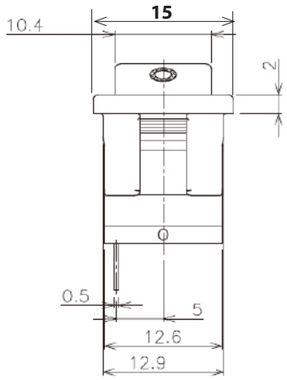

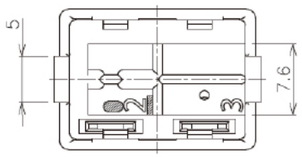

■ Quick Connect Terminal（#187）

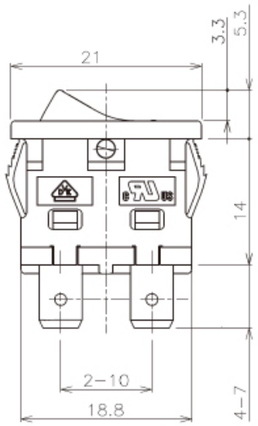

VZ22003400（DP）

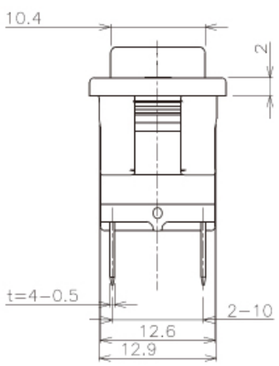

VZ1200G400（SP2-3）

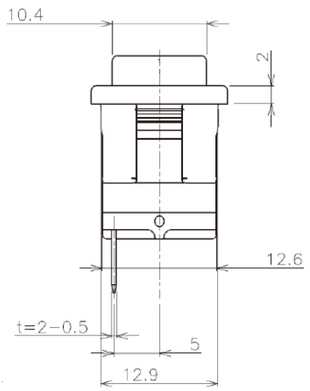

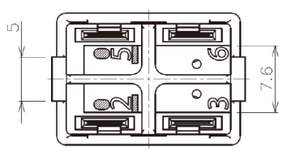

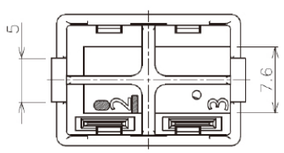

* For products other than those listed above or for custom items, please contact us.

■ PCB Terminal

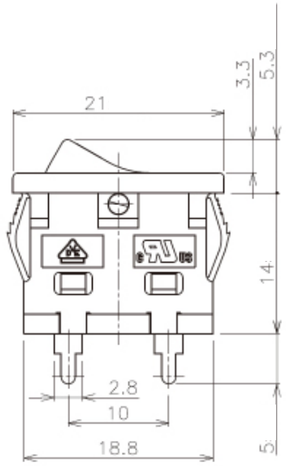

VZ22001400（DP）

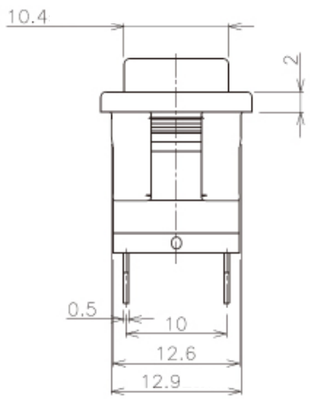

VZ1200C400（SP2-3）

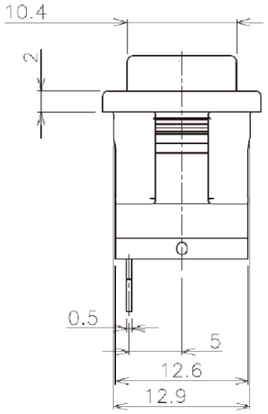

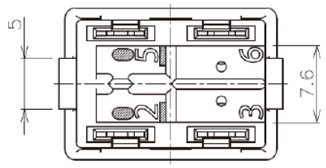

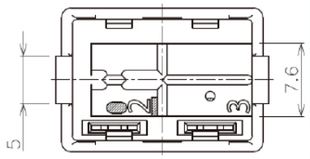

■ Operational-part Indication

Side I O（Uper：ON, Below：OFF）

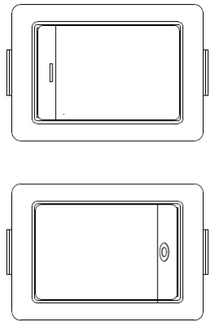

White Dot（Right-push ON）

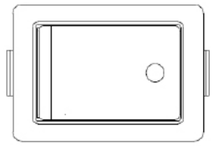

Upper O −（Right-push ON）

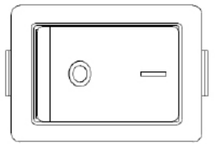

Upper O I（Right-push ON）

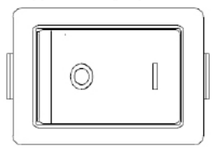

No Indication（Right-push ON）

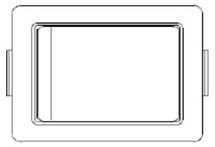

Rocker

VZ Series

250V/125VAC 10A

Solder Lug
PCB Terminal
Quick Connect Terminal

SP 2P

cUL
VDE

* For products other than those listed above or for custom items, please contact us.

All available Terminals & Indications

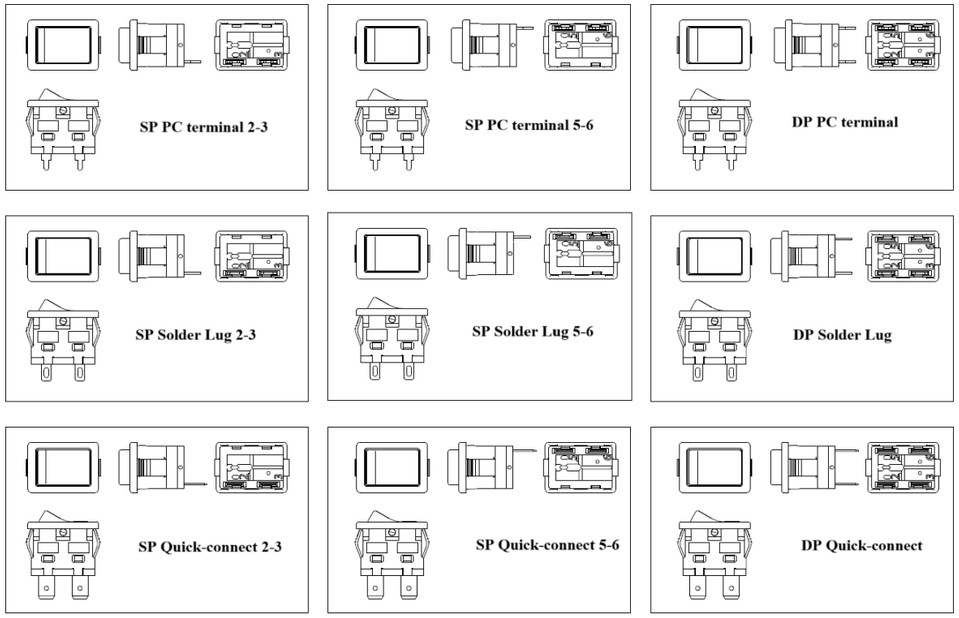

Mounting Hole Dimensions

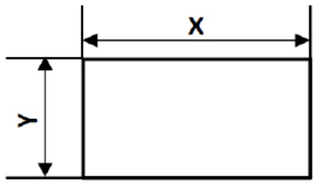

Panel Thickness	X Dimension	Y Dimension
0.75≦ t <1.25	$19.2^{0}_{-0.1}$	$12.9^{+0.1}_{0}$
1.25≦ t <2.00	$19.4^{0}_{-0.1}$	$12.9^{+0.1}_{0}$

Compliance with the European RoHS Directive

All DIP switches, control switches, connectors, and terminal blocks manufactured by OTAX with the following RoHS Directive:
Directive 2011/65/EU of the European Parliament and of the Council on the restriction of the use of certain hazardous substances in electrical and electronic equipment (RoHS).
Our products do not contain any of the ten specified hazardous substances (except for exempted applications):
Lead (Pb) Mercury (Hg) Cadmium (Cd) Hexavalent chromium (Cr^{6+}) Polybrominated biphenyls (PBB) Polybrominated diphenyl ethers (PBDE) Di(2-ethylhexyl) phthalate (DEHP) Butyl benzyl phthalate (BBP) Dibutyl phthalate (DBP) Diisobutyl phthalate (DIBP)

Cautions on Handling

1. Snap-in mounting should be performed only once.

Rocker
VZ Series
250V/125VAC 10A
Solder Lug PCB Terminal Quick Connect Terminal
SP 2P
cUL VDE

Switch Tips

Cautions on Capacitive Load

Many modern electronic devices use switching power supplies. Inside these power supplies, a large capacitor is typically placed immediately after the rectifier circuit, which presents a capacitive load—one of the most demanding types of loads from the perspective of a switch.
Similarly, the power supplies used in the increasingly popular LED lighting systems also often present a capacitive load.

For this reason, please pay close attention to inrush current during switch operation and select a switch with an appropriate current rating.
If large inrush currents are expected, we recommend using switching power supplies with built-in inrush current limiting circuits, or referring to the "Useful Advices and Precautions on Usage of Operational Switches" for various methods of limiting inrush current.

If switches are used under high inrush current conditions without any protective measures, there is a risk that the switch contacts may weld together, potentially leading to serious failure or accidents.

Capacitive Load	Since capacitors draw large currents when first energized, high-level inrush currents are generated.	10–1000 times the steady-state current in microseconds to milliseconds	Switching power supplies (capacitors in the primary power circuit), LED lighting	(Measure the actual inrush current and select an appropriately rated switch. Consider an inrush current reduction circuit.)

OTAX Co., Ltd.
1215, Nippacho, Kohoku-ward,
Yokohama, Kanagawa, 223-8558
Japan
TEL: +81-45-543-5621（main）
HP：https://www.otax-en.com/